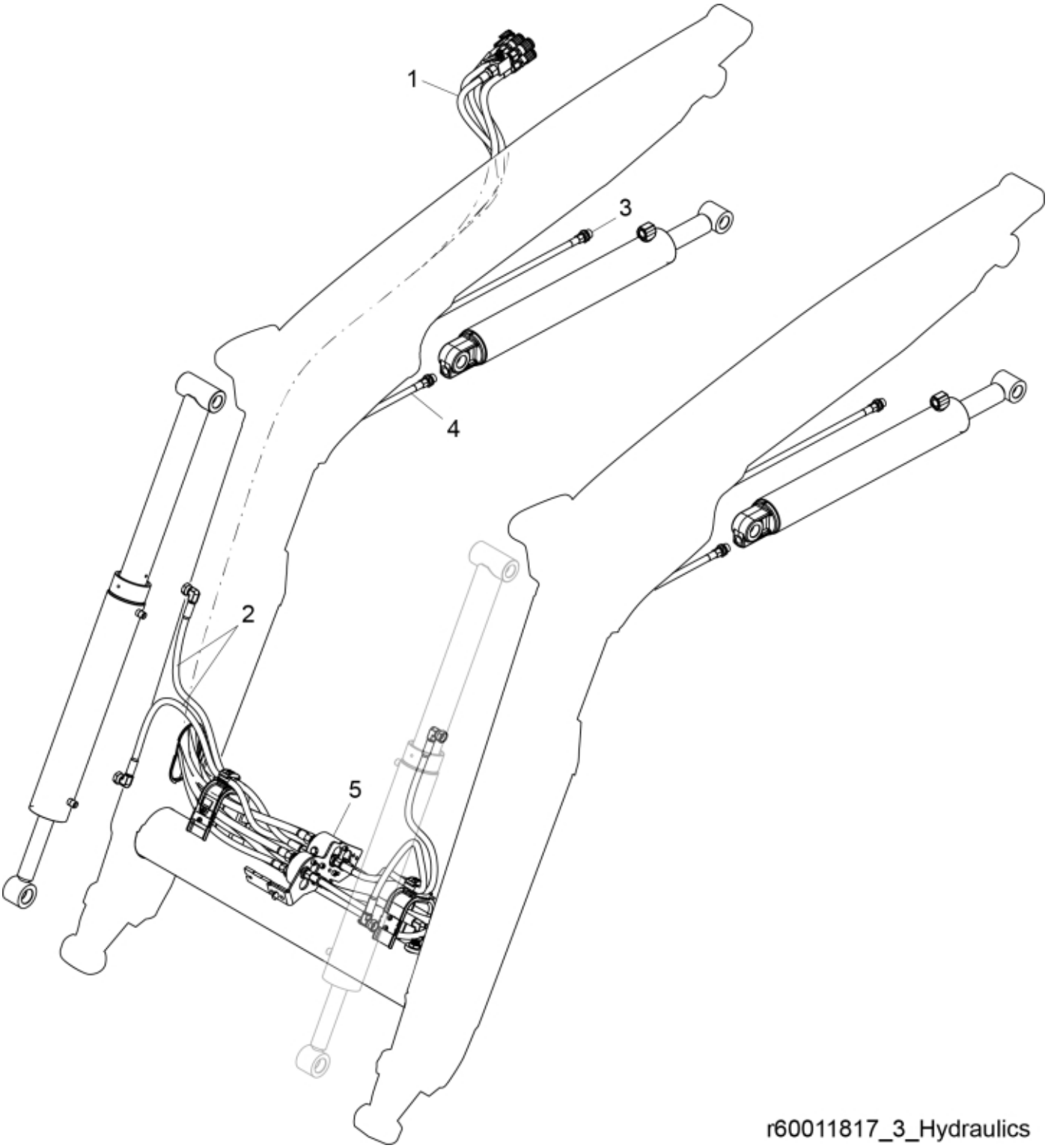

© 2025 Jost

Part assemblies Hydraulics

Hydraulics:Cylinder hoses

PartNo	Pos	Qty	Name	Specifications
- - -	1	1	Main hose kit	See separate part list
60003017	2	4	Hose	3/8" L=940 3/8GRLMA - 3/8G90LMA
60003883	3	2 PCS	Hose	3/8" L=2770 3/8GRLMA - 3/8GRLMA
60003884	4	2 PCS	Hose	1/2" L=2080 1/2GRLMA - 1/2GRLMA
4500233	5	1	CVU Basic	MSL

© 2025 Jost