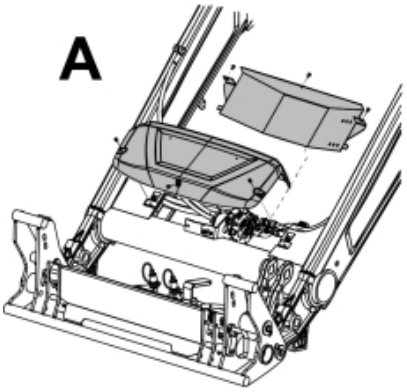

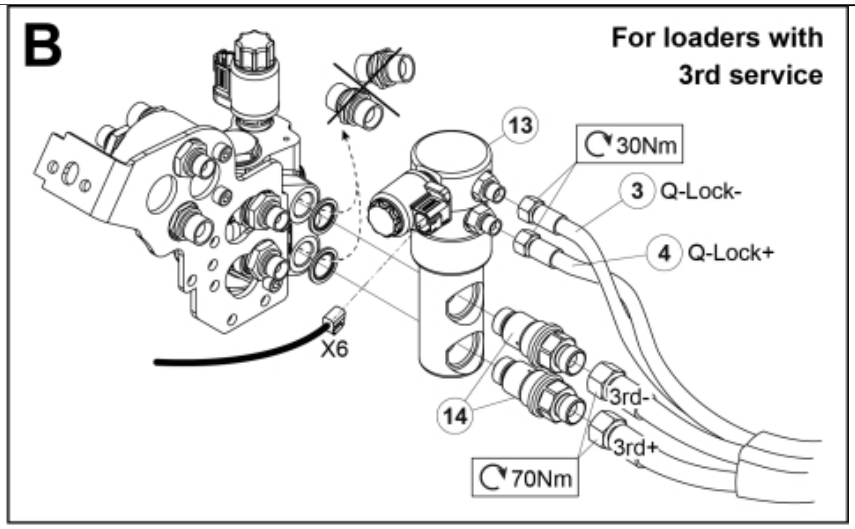

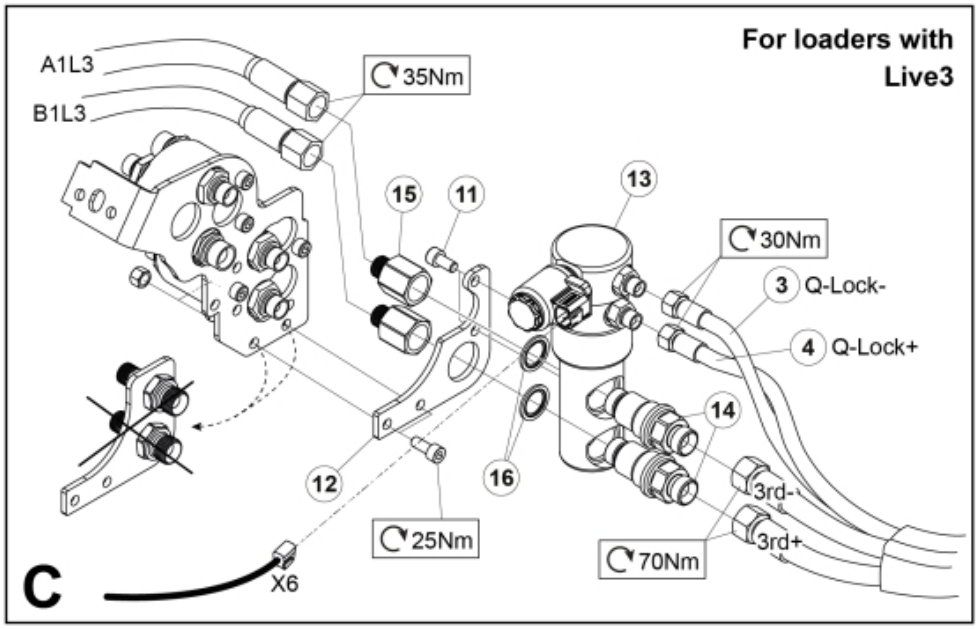

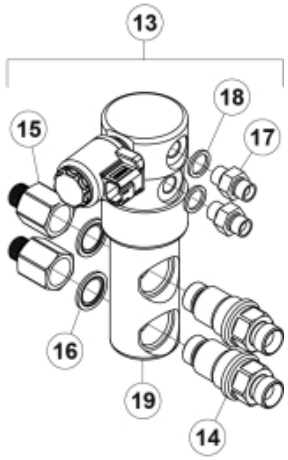

M 60019959-1
M 60019960-1
M 60019961-1
M 60019962-1

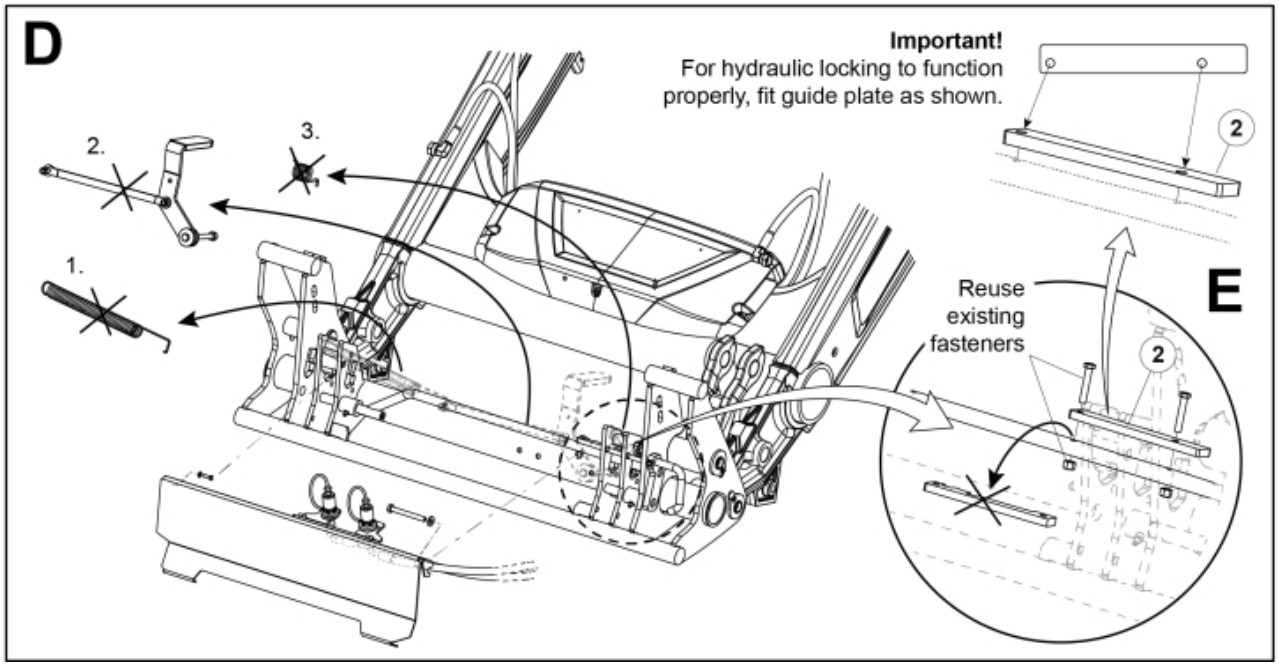

© 2025 Jost

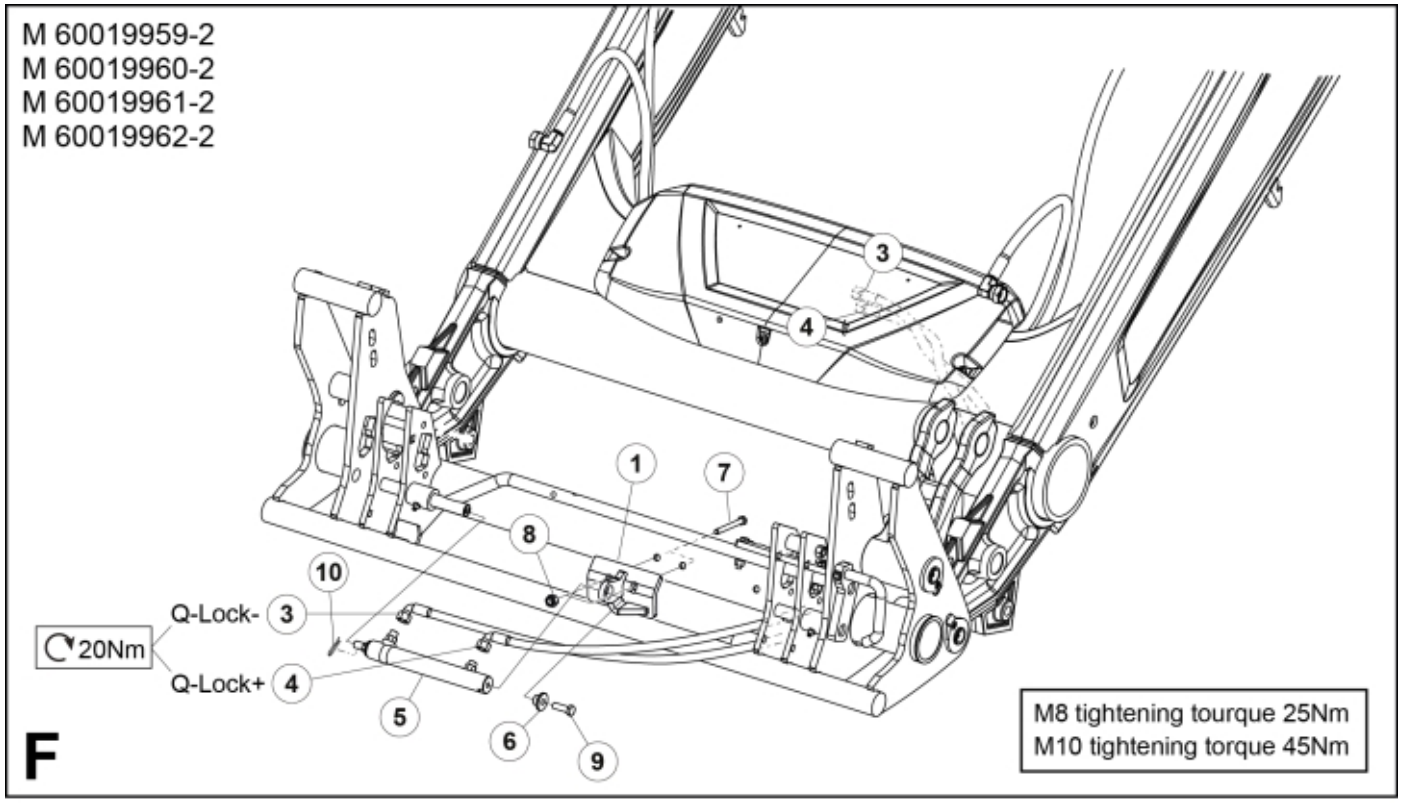
M 60019959-2
M 60019960-2
M 60019961-2
M 60019962-2
3
4
1
7
8
10
Q-Lock- 3
20Nm
Q-Lock+ 4
5
6
9
F
M8 tightening tourque 25Nm
M10 tightening torque 45Nm

© 2025 Jost

Part assemblies		Q-Lock Euro/SMS DL		
Specification		Year To: 1/31/2019 12:00:00 AM		
PartNo	**Pos**	**Qty**	**Name**	**Specifications**
60019962		1 PCS	Q-Lock Euro/SMS DL	1/31/2019 12:00:00 AM
60012213	1	1	Attachment	
60013927	2	1 PCS	Guide plate	
60018856	3	1	Hose	1/4" L=1590 1/4G90LM - 1/4GRLM
60018858	4	1	Hose	1/4" L=1430 1/4G90LM - 1/4GRLM
60103722	5	1	Cylinder	
60006448	6	1	Sleeve	
5002081	7	2	Screw	M6S M10 x 110 (8.8)
5011554	8	2	Nut	Loc-King M10
5002971	9	1	Screw	M6S 10x30 Drilock
60020459	10	1	Locking Pin	
5050342	11	2	Screw	MC6S M8x14 (8.8)
60104271	12	1	Bracket	
4500151	13	1	Block cpl	Hydr. Lock, 1/31/2019 12:00:00 AM
60104390	14	2	• Adaptor	G1/2" Banjo
60104391	15	2	• Adaptor	G1/2" - G3/8"
5013853	16	2	• Dowty washer	Tredo 1/2", Part is included in kit 60007907 Hose cpl., 9032177 Hose cpl.
1120122	17	2	• Adaptor	R 1/4"K - R 1/4"K
5013856	18	2	• Dowty washer	Tredo 1/4"
60104276	19	1	• Valve assy.	NLA, Replaced by 60037622

© 2025 Jost