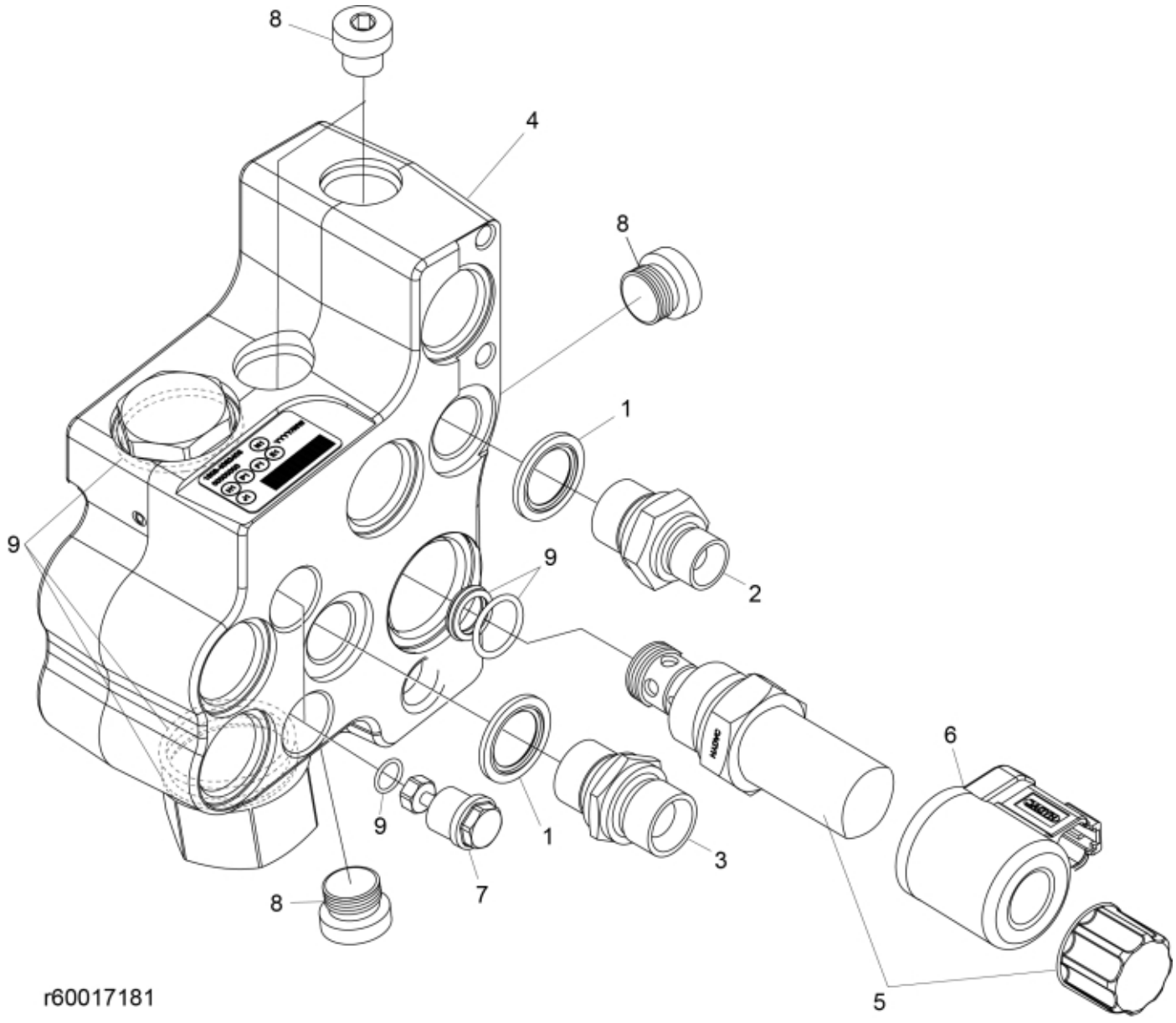

© 2025 Jost

Part assemblies Specification		Block cpl Specification: APC 2		
PartNo	**Pos**	**Qty**	**Name**	**Specifications**
4500152		1	Block cpl	APC 2
5013853	1	2	• Dowty washer	Tredo 1/2", Part is included in kit 60007907 Hose cpl., 9032177 Hose cpl.
1120011	2	1	• Adaptor	R1/2"-R3/8"
1120012	3	1	• Adaptor	G 1/2"
60104316	4	1	• Valve assy.	APC
60019564	5	1	•• Valve	2/2
60019546	6	1	•• Coil	
60019565	7	2	•• Check valve	
60019489	8	4	•• Plug	G1/4 Included in 60019559
60019559	9	1	•• Seal kit	

© 2025 Jost