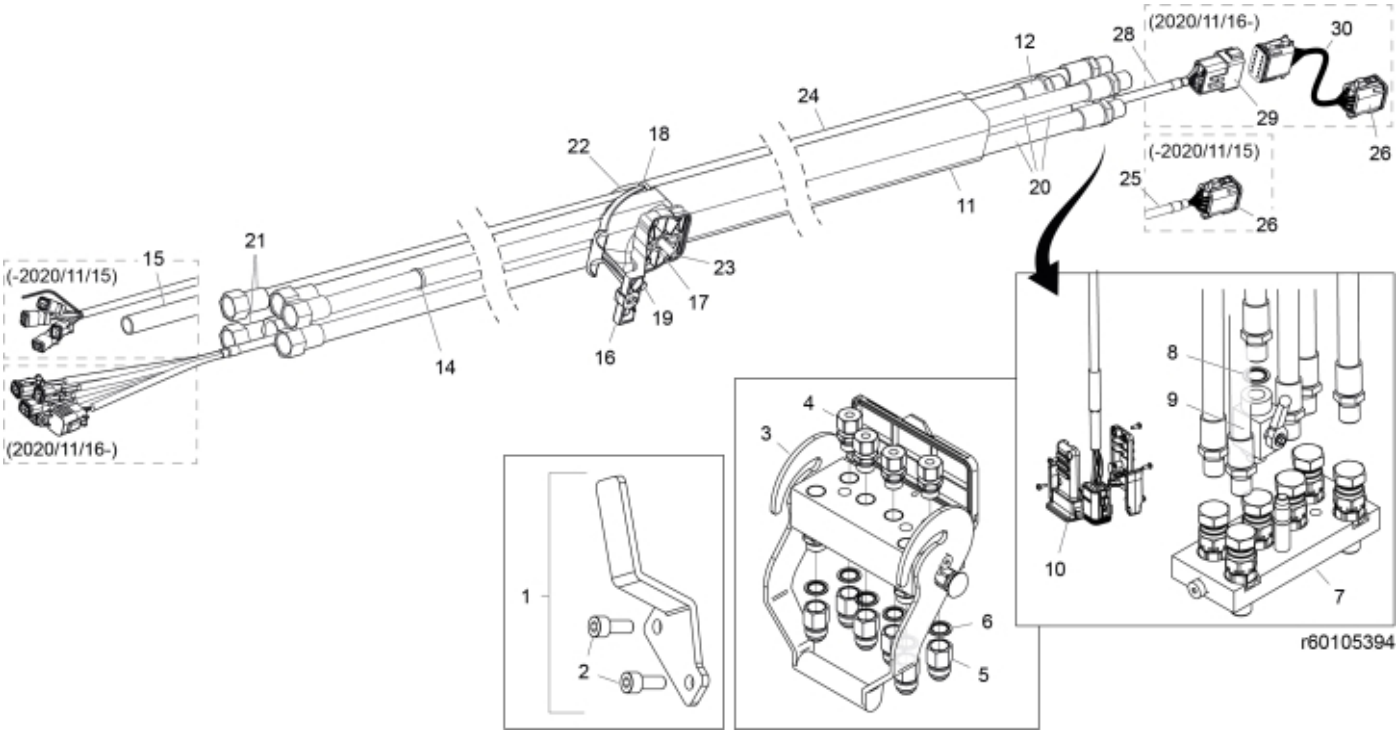
(-2020/11/15)
15
(2020/11/16-)
21
14
22
18
16
19
17
23
24
12
20
11
28
(2020/11/16-)
30
29
26
(-2020/11/15)
25
26
8
9
10
7
r60105394
1
2
4
3
6
5

© 2025 Jost

Part assemblies Main hose kit, HQ-6

PartNo	Pos	Qty	Name	Specifications
60015929	1	1	Holder cpl.	
5004061	2	2	• Screw	MC6S M8x20
5044924	3	1	Multi coupling, lower part	
5044925	4	1	Adapter kit	Consists of 4 pcs
11120459	5	6	Adaptor	1 1/16" UNF JIC - M22 x 1,5
5013905	6	6	Washer	Tredo 122
5044923	7	1	Multi coupling, upper part	
5013853	8	1	Dowty washer	Tredo 1/2", Part is included in kit 60007907 Hose cpl., 9032177 Hose cpl.
5033898	9	1	Shut-off valve	1/2"
5103054	10	1	Connector handle	
5033894	11	1	Protection sleeve	800mm, D=60-70mm
60015655	12	1 PCS	Hose	1/2" L=3995 1/2GRU - 1/2GRLMA
5033621	14	10	Cable tie	4.6x150
60007058	15	1	Tube	L=2640 for loaders produced until 2020/11/15
60003841	16	1	Hose clamp	Lower
5011053	17	3	• Nut	M6M M8
60002825	18	1	Hose clamp	Upper
5004055	19	1	Screw	MC6S 8x70
60007049	20	3	Hose	1/2" L=4070 1/2GRU - 1/2GRLMA
60008547	21	2 PCS	Hose	3/8" L=4150 1/2GRU - 3/8GRLMA
60003881	22	1	Hose clamp	
60012277	23	1	Screw	MC6LS M8x80 (8.8)
5034121	24	1	Protection sleeve	
60003889	25	1	Cable	L=4545 for loaders produced until 2020/11/15
5101083	26	1	• Connector, male	8-Pole
5033606	27	1	Cable tie	7,5 x 385
59050108	28	1 PCS	Electr. Cable	L=4615 for loaders produced from 2020/11/16
5050918	29	1	• Connector	Deutsch DT 12 pin female
59050115	30	1	Electr. Cable	QCS to LCS for loaders produced from 2020/11/16

© 2025 Jost