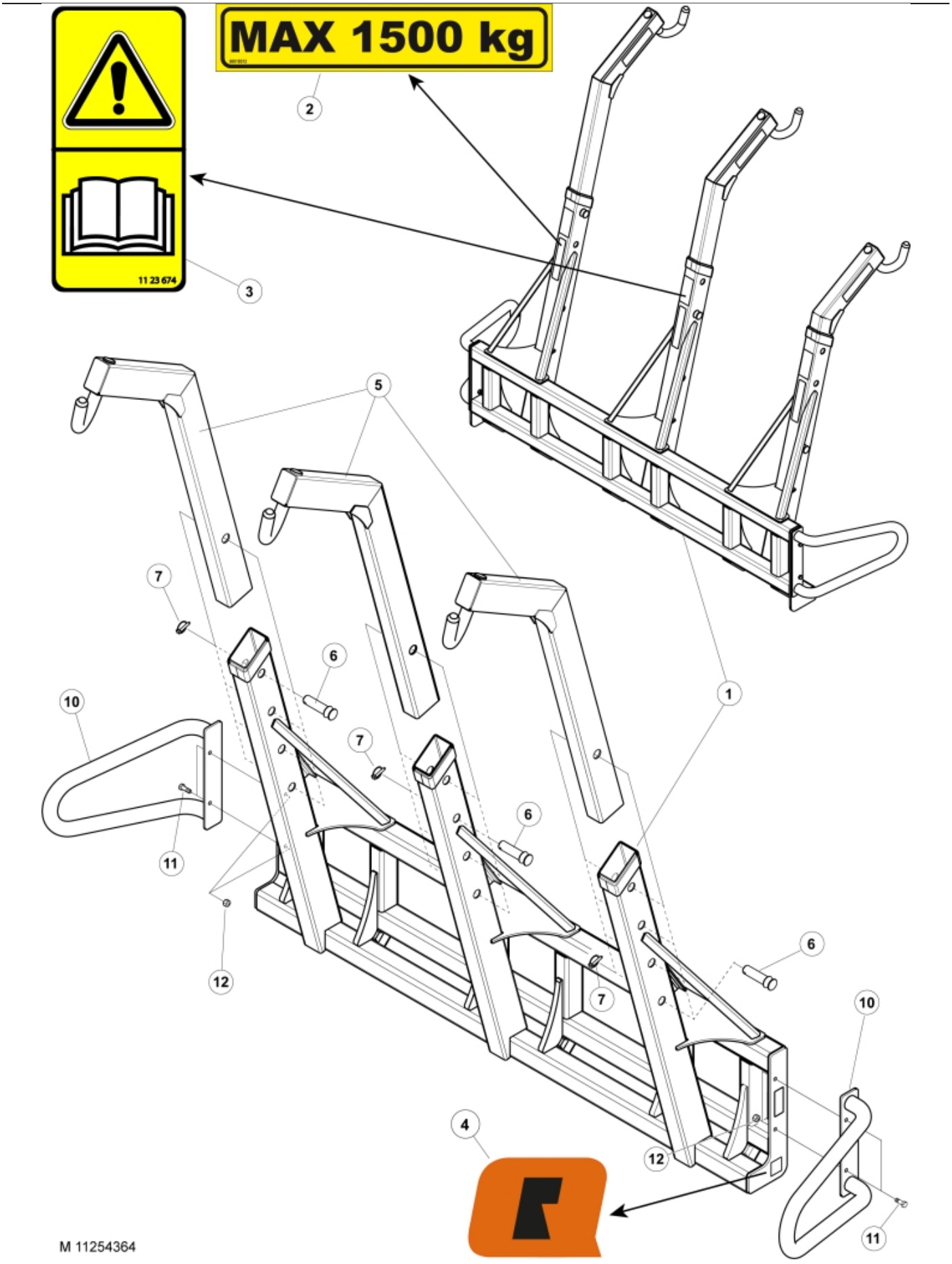

© 2025 Jost

Part assemblies	Big Bag Lifter, Triple			
Specification	Year From: 1/1/2017 12:00:00 AM			
PartNo	**Pos**	**Qty**	**Name**	**Specifications**
11254364		1	Big Bag Lifter, Triple	1/1/2017 12:00:00 AM
11255985	1	1	Frame	Triple arm
60018512	2	3 PCS	Warning decal	Max 1500 kg
1123674	3	3	Warning decal	"Read manual"
60049053	4	1	Decal	"Q" small 80x57
60057386	5	3 PCS	Arm	Triple arm
60015958	6	3	Locking Pin	
5017002	7	3	Linch pin	
60018454	10	2 PCS	Support kit	
5002103	11	2	• Screw	M12 x 35
5011555	12	2	• Nut	M12 Loc

© 2025 Jost