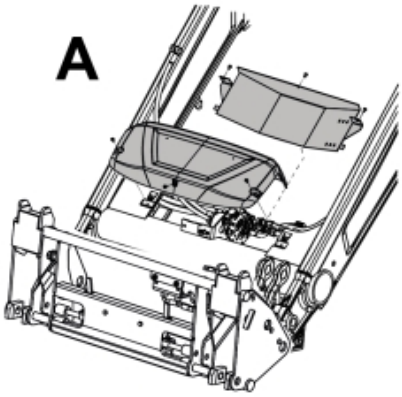

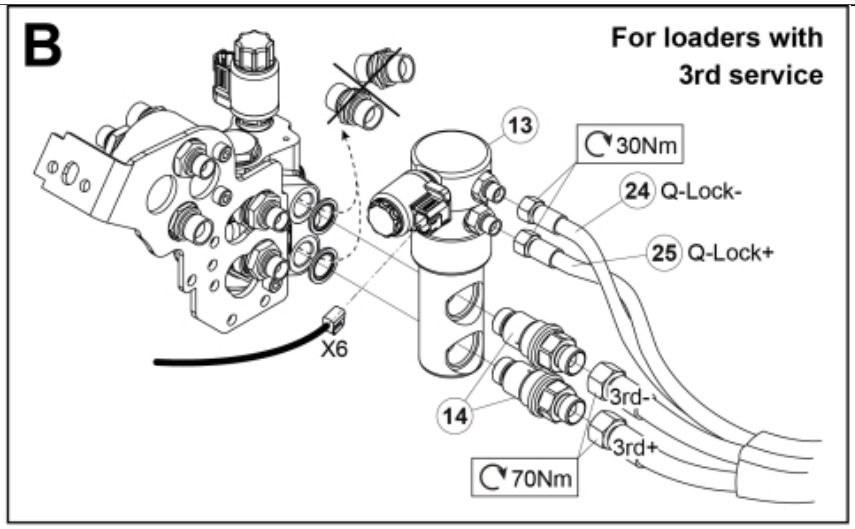

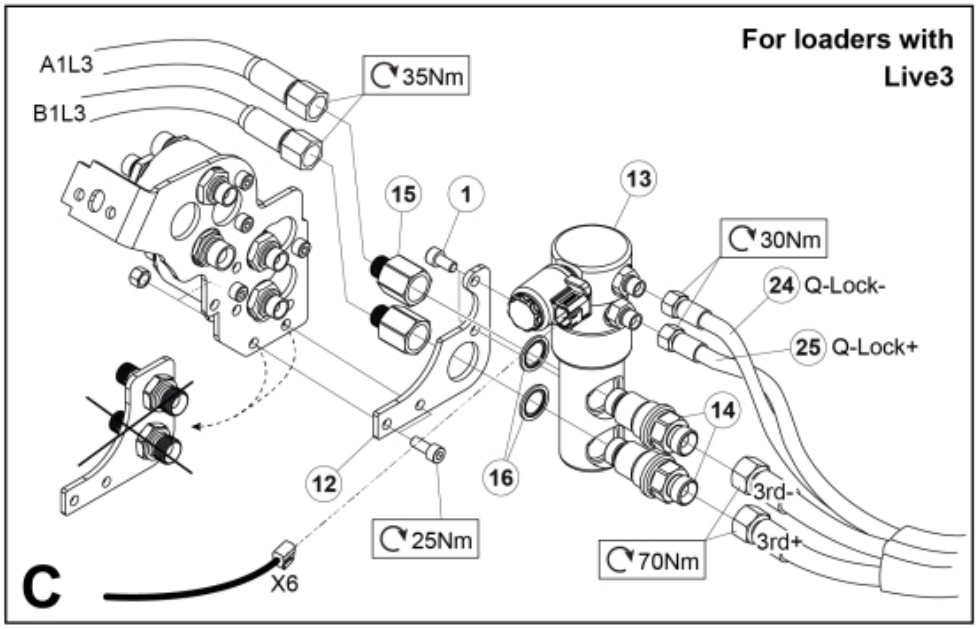

M 60020197-1

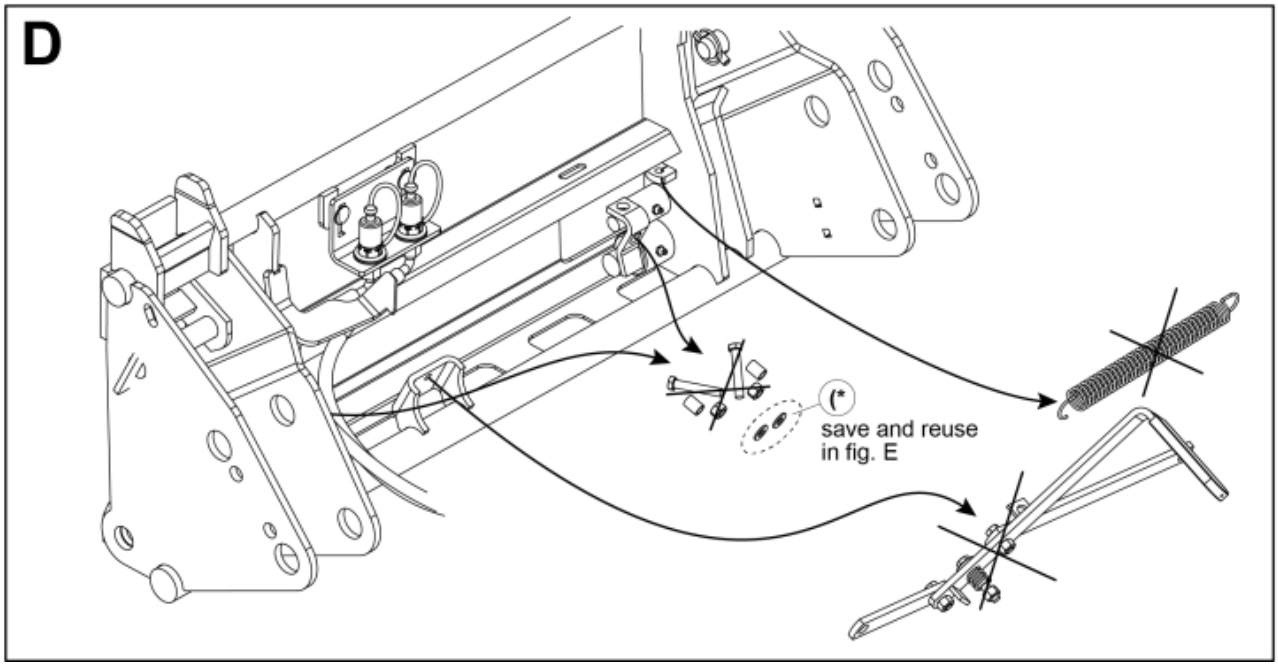

© 2025 Jost

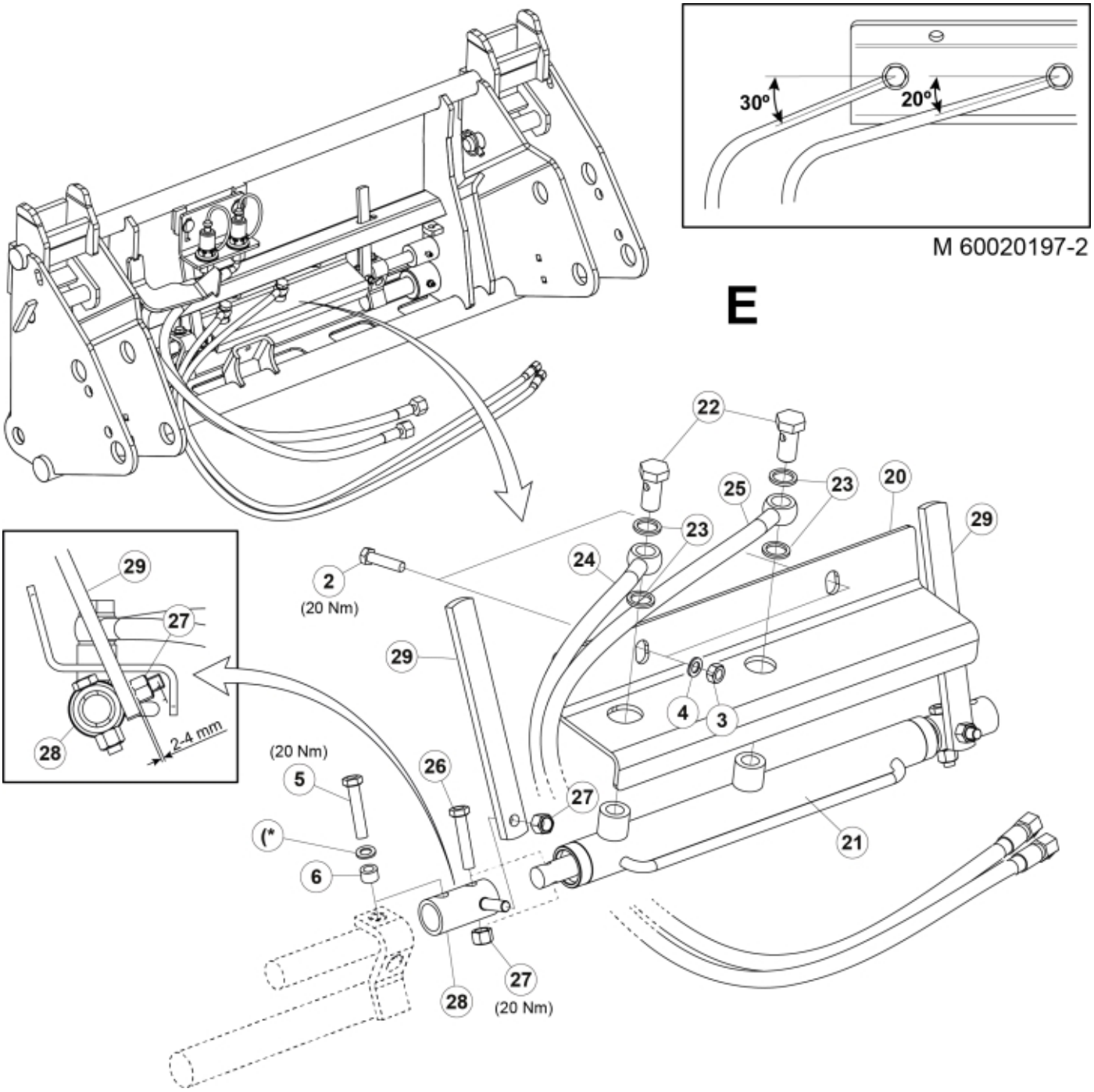
30°
20°
M 60020197-2
E
22
23
25
23
20
29
24
2
(20 Nm)
29
4
3
29
27
28
2-4 mm
(20 Nm)
5
26
27
(*
6
21
28
27
(20 Nm)

© 2025 Jost

Part assemblies Specification	Q-Lock Specification: Euro/Valtra DM Year To: 31/01/2019 00:00:00

PartNo	Pos	Qty	Name	Specifications
60020197		1	Q-Lock	Euro/Valtra DM, 31/01/2019 00:00:00
5050342	1	2	Screw	MC6S M8x14 (8.8)
5002077	2	2	Screw	M6S 10x30
5011554	3	2	Nut	Loc-King M10
5013110	4	2	Washer	BRB 10.5x22x2
5002972	5	2	Screw	M6S 10x40 Driloc
5219100	6	2	Spacer	
60104271	12	1	Bracket	
4500151	13	1	Block cpl	Hydr. Lock, 31/01/2019 00:00:00
60104390	14	2	• Adaptor	G1/2" Banjo
60104391	15	2	• Adaptor	G1/2" - G3/8"
5013853	16	2	• Dowty washer	Tredo 1/2", Part is included in kit 60007907 Hose cpl., 9032177 Hose cpl.
1120122	17	2	• Adaptor	R 1/4"K - R 1/4"K
5013856	18	2	• Dowty washer	Tredo 1/4"
60104276	19	1	• Valve assy.	NLA, Replaced by 60037622
5219243	20	1	Protection plate	
60013294	21	1	Cylinder	25/16 L=370-590
1120166	22	2	Banjo fitting	R1/4"
5013856	23	4	Dowty washer	Tredo 1/4"
60013279	24	1	Hose	1/4" L=1230 1/4Banjo - 1/4GRLM
60013280	25	1	Hose	1/4" L=1380 1/4Banjo - 1/4GRLM
5002055	26	2	Screw	M6S M8x40
5011553	27	4	Nut	M6M M8 Loc-king
5219240	28	2	Sleeve	
5219049	29	2	Indicator	
5013110	(*	2	Washer	BRB 10.5x22x2

© 2025 Jost