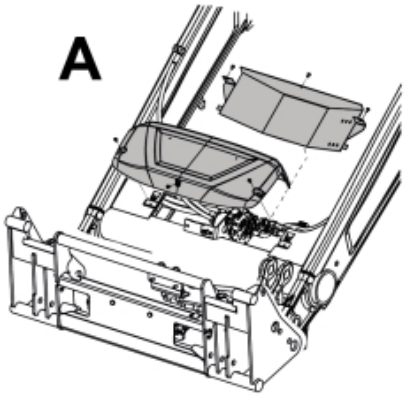

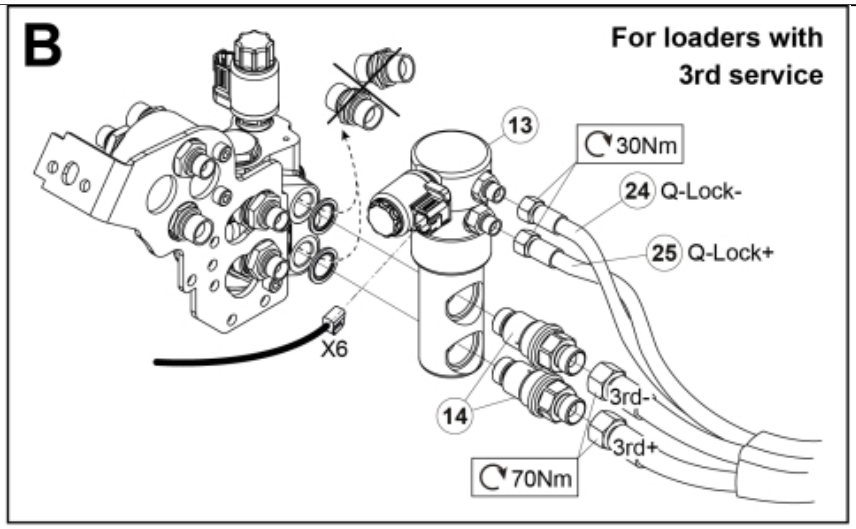

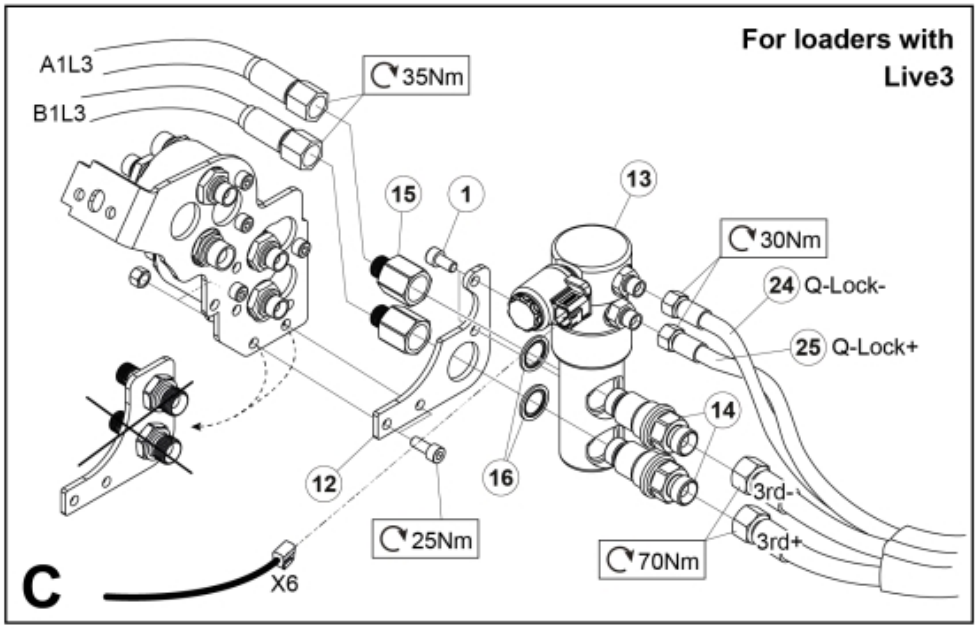



M 60020265-1

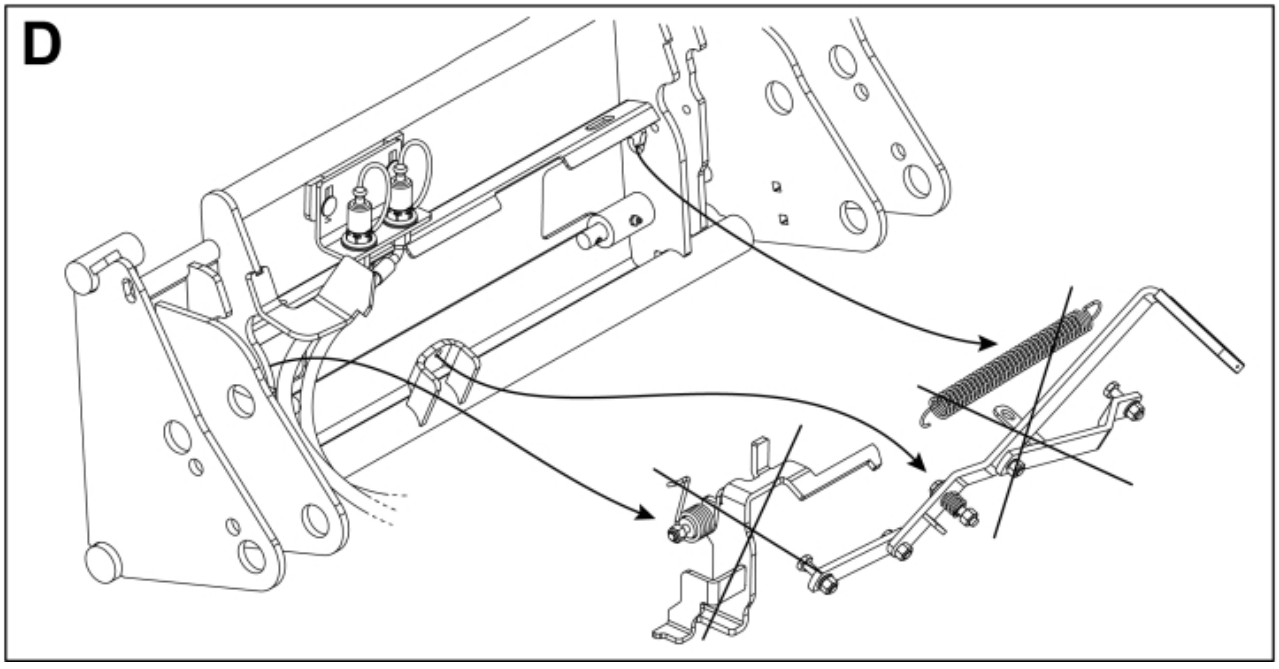

© 2025 Jost

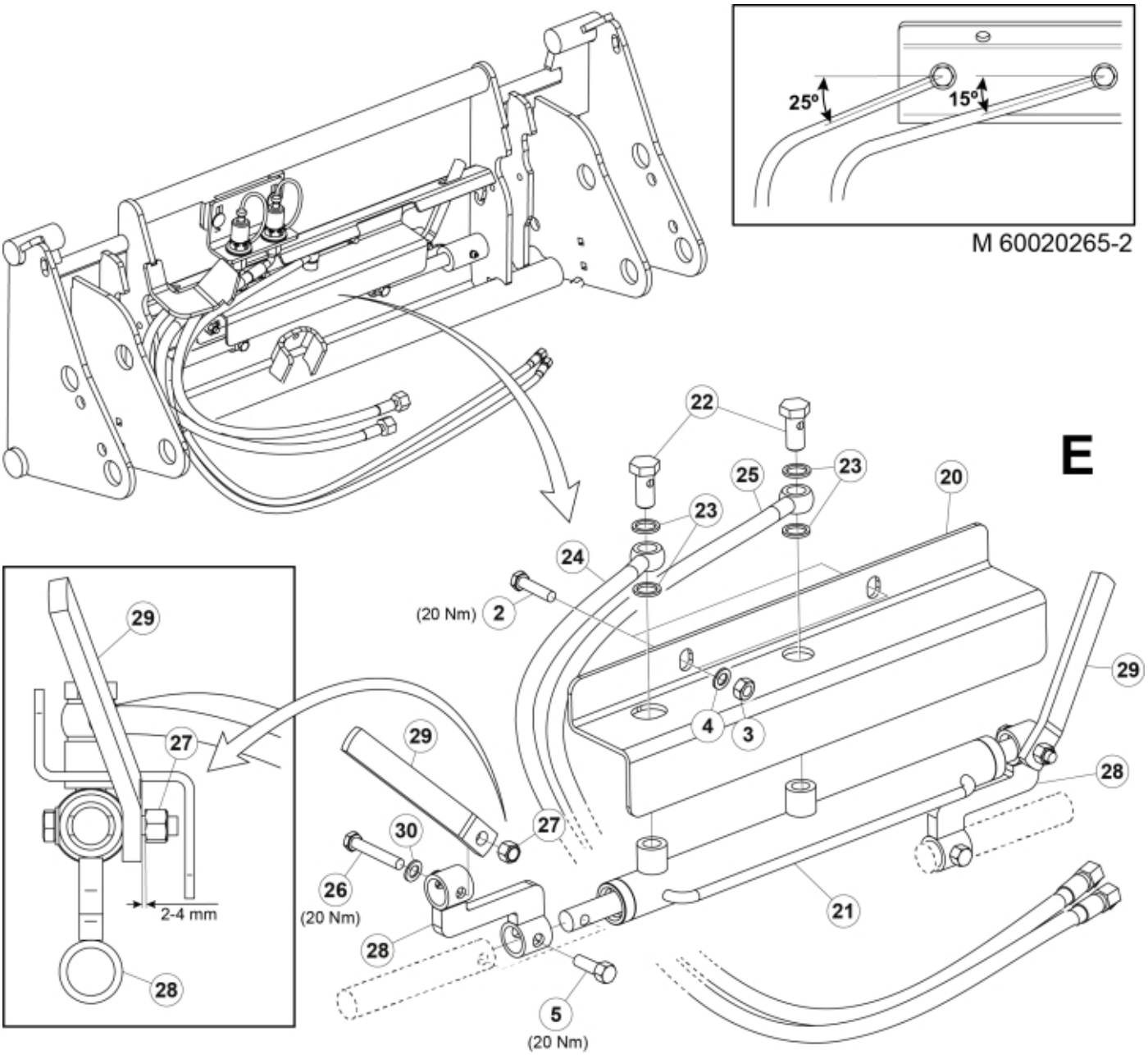
25°
15°
M 60020265-2
E
22
23
25
20
23
24
(20 Nm) 2
29
4
3
29
28
29
27
30
27
26
(20 Nm)
21
28
5
(20 Nm)
29
27
2-4 mm
28

© 2025 Jost

Part assemblies	Q-Lock
Specification	Specification: Euro/Typ3 DM
	Year To: 1/31/2019 12:00:00 AM

PartNo	Pos	Qty	Name	Specifications
60020265		1	Q-Lock	Euro/Typ3 DM, 1/31/2019 12:00:00 AM
5050342	1	2	Screw	MC6S M8x14 (8.8)
5002077	2	2	Screw	M6S 10x30
5011554	3	2	Nut	Loc-King M10
5013110	4	2	Washer	BRB 10.5x22x2
5002971	5	2	Screw	M6S 10x30 Drilock
60104271	12	1	Bracket	
4500151	13	1	Block cpl	Hydr. Lock, 1/31/2019 12:00:00 AM
60104390	14	2	• Adaptor	G1/2" Banjo
60104391	15	2	• Adaptor	G1/2" - G3/8"
5013853	16	2	• Dowty washer	Tredo 1/2", Part is included in kit 60007907 Hose cpl., 9032177 Hose cpl.
1120122	17	2	• Adaptor	R 1/4"K - R 1/4"K
5013856	18	2	• Dowty washer	Tredo 1/4"
60104276	19	1	• Valve assy.	NLA, Replaced by 60037622
5219243	20	1	Protection plate	
60013159	21	1	Cylinder	Black
1120166	22	2	Banjo fitting	R1/4"
5013856	23	4	Dowty washer	Tredo 1/4"
60013279	24	1	Hose	1/4" L=1230 1/4Banjo - 1/4GRLM
60013280	25	1	Hose	1/4" L=1380 1/4Banjo - 1/4GRLM
5002056	26	2	Screw	M6S 8 x 50
5011553	27	2	Nut	M6M M8 Loc-king
5219145	28	2	Adaptor	
5219154	29	2	Indicator	
5013101	30	2	Washer	BRB 8,4 x 16

© 2025 Jost