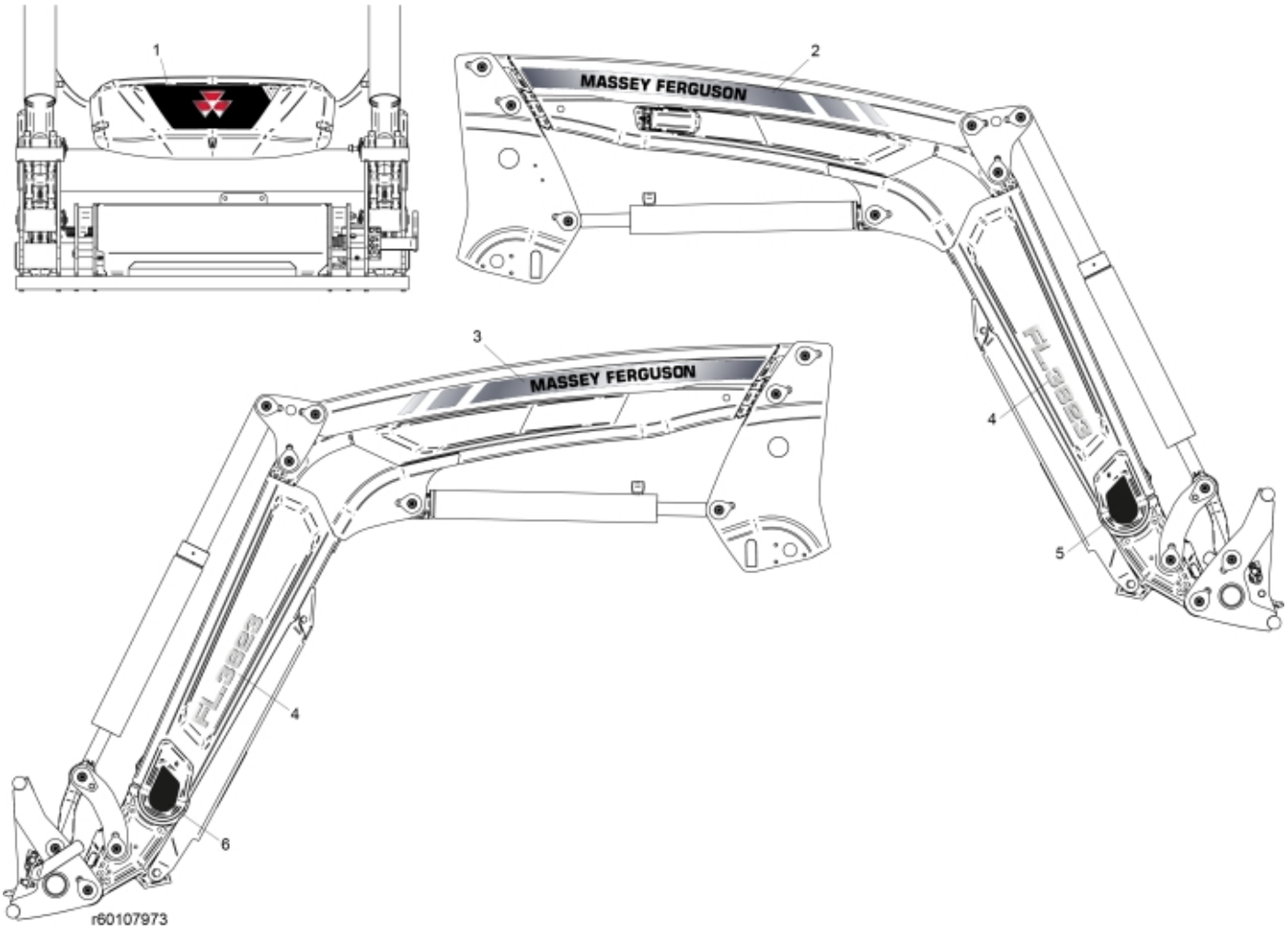

© 2025 Jost

Description	FL3823
Part assemblies	Decals
Specification	Year To: 8/31/2024 12:00:00 AM

PartNo	Pos	Qty	Name	Specifications
60108013	1	1	Decal	MF Centre Cover
60107990	2	1	Decal Brand, RH	
60107989	3	1	Decal Brand, LH	
60107999	4	2 PCS	Decal, Model	FL3823
60022989	5	1	Decal RH	Cover, small
60108091	6	1	Decal LH	Cover, small

© 2025 Jost