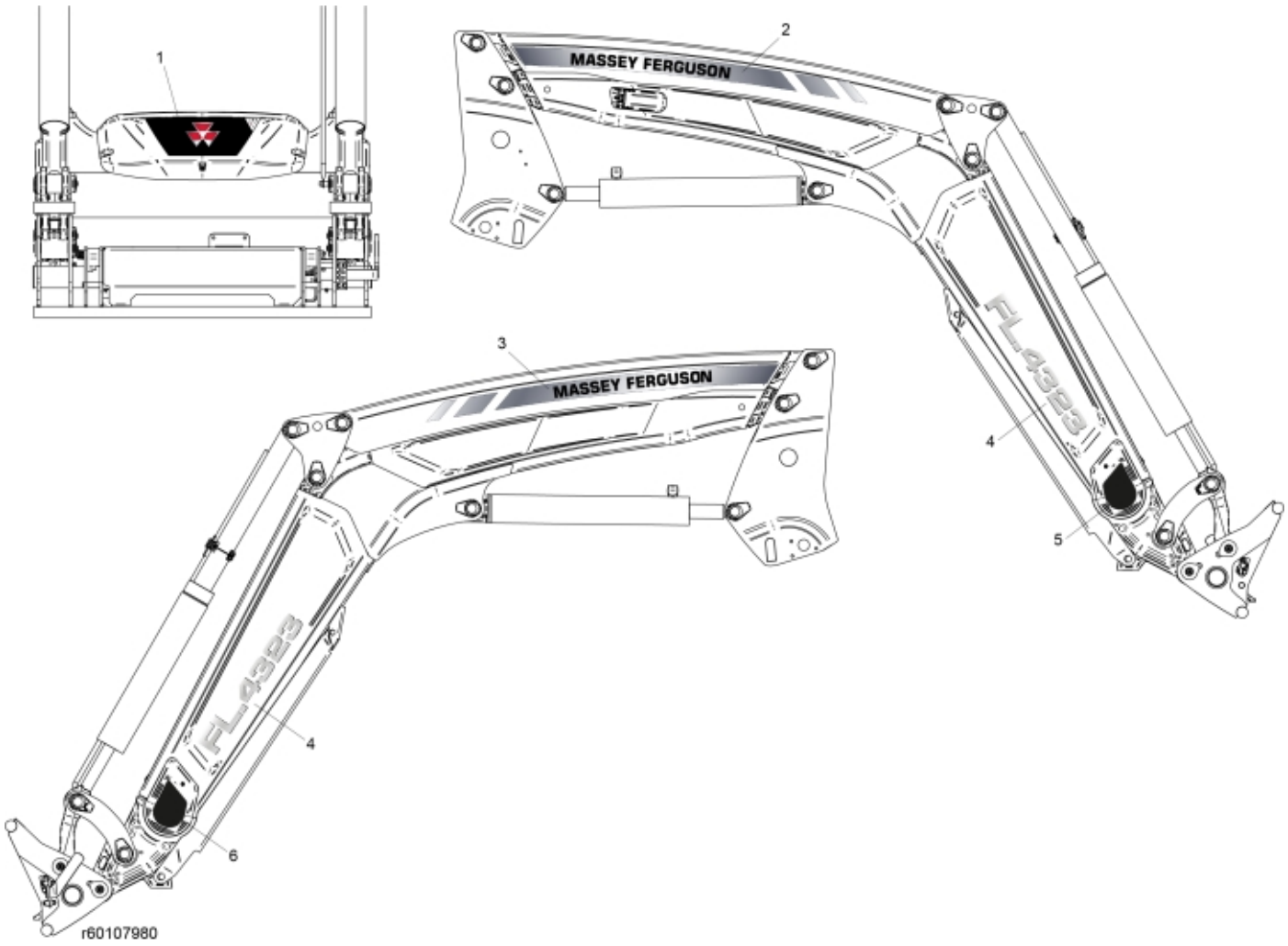
1
2
MASSEY FERGUSON
FL4323
4
5
3
MASSEY FERGUSON
FL4323
4
6
r60107980

© 2025 Jost

Description	FL4323
Part assemblies	Decals
Specification	Year To: 8/31/2024 12:00:00 AM

PartNo	Pos	Qty	Name	Specifications
60108013	1	1	Decal	MF Centre Cover
60107988	2	1	Decal Brand, RH	
60107987	3	1	Decal Brand, LH	
60108006	4	2	Decal, Model	FL4323
60108092	5	1	Decal RH	Cover, large
60108093	6	1	Decal LH	Cover, large

© 2025 Jost