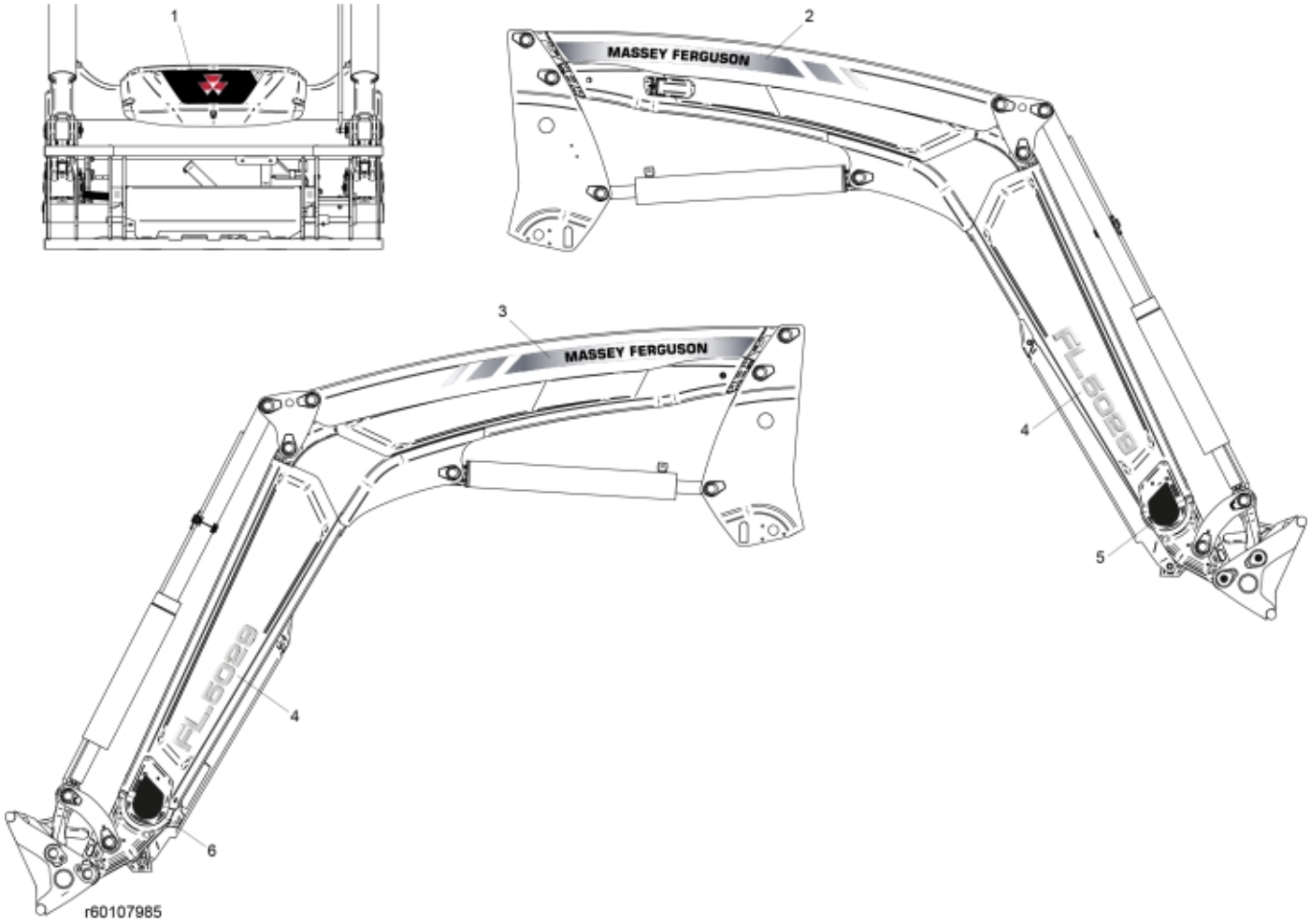
1
2
MASSEY FERGUSON
3
MASSEY FERGUSON
4
FL5020
5
4
FL5020
6
r60107985

© 2025 Jost

Description	FL5029
Part assemblies	Decals
Specification	Year To: 8/31/2024 12:00:00 AM

PartNo	Pos	Qty	Name	Specifications
60108013	1	1	Decal	MF Centre Cover
60107988	2	1	Decal Brand, RH	
60107987	3	1	Decal Brand, LH	
60108011	4	2 PCS	Decal, Model	FL5029
60108092	5	1	Decal RH	Cover, large
60108093	6	1	Decal LH	Cover, large

© 2025 Jost