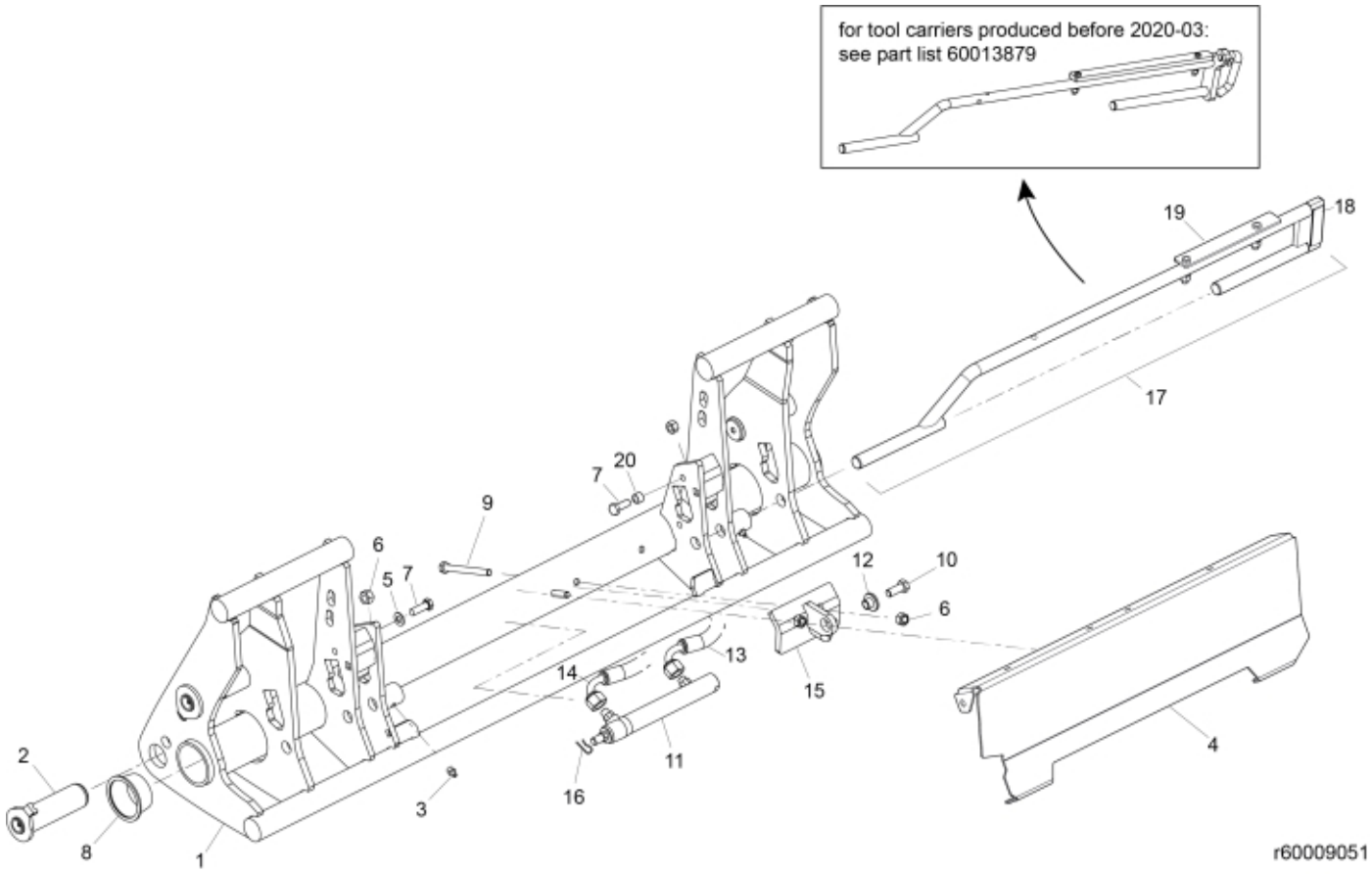
for tool carriers produced before 2020-03:
see part list 60013879
1
2
3
4
5
6
7
8
9
10
11
12
13
14
15
16
17
18
19
20
r60009051

© 2025 Jost

Description	Tool carrier
Part assemblies	Euro DL Hydraulic
Specification	Specification: MF Red

PartNo	Pos	Qty	Name	Specifications
60009051-19		1	Euro DL Hydraulic	MF Red
60078908-19	1	1	Tool carrier	MF Red
60006415	2	4	Pin	D40 L=134
5023005	3	2	Greaser	M 10 x 1
60076610-19	4	1	Cover plate	MF Red
5013110	5	1	Washer	BRB 10.5x22x2
5011554	6	4	Nut	Loc-King M10
5002077	7	2	Screw	M6S 10x30
5221573	8	2	Plastic cover	
5002081	9	2	Screw	M6S M10 x 110 (8.8)
5002971	10	1	Screw	M6S 10x30 Drilock
60103722	11	1	Cylinder	
60006448	12	1	Sleeve	
60018858	13	1	Hose	1/4" L=1430 1/4G90LM - 1/4GRLM
60018856	14	1	Hose	1/4" L=1590 1/4G90LM - 1/4GRLM
60011993	15	1	Attachment	
60020459	16	1	Locking Pin	
4501177	17	1	Locking mechanism cpl. (DL Hyd)	Replaces 60013270 and 4501168
60039148	18	1	• Plastic handle	
60013883	19	1	• Guide plate	
5219100	20	1	Spacer	

© 2025 Jost