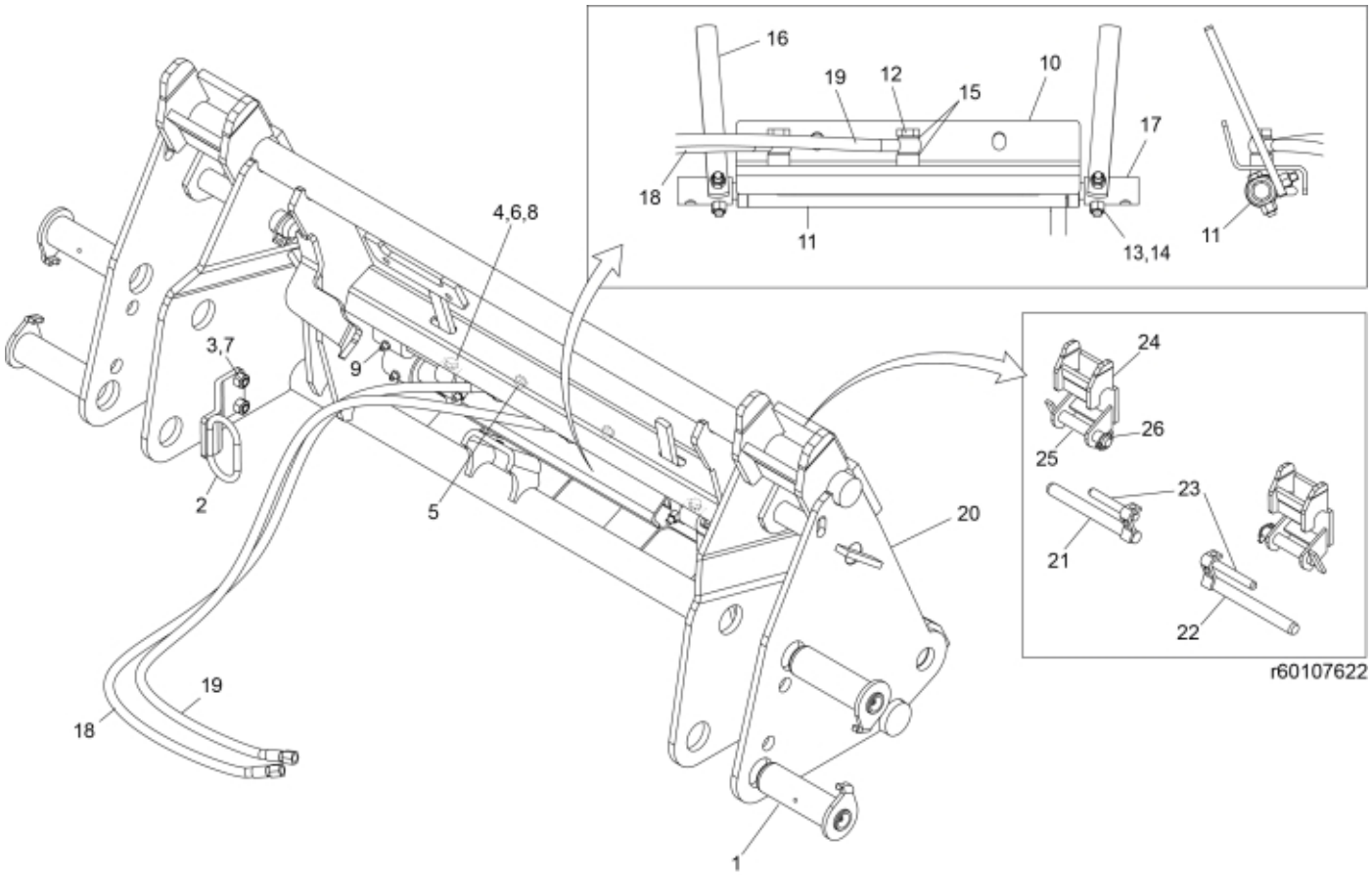
16
19
12
15
10
17
18
11
13,14
11
4,6,8
3,7
9
2
5
20
19
18
1
24
26
25
23
21
22
r60107622

© 2025 Jost

Description	Tool carrier
Part assemblies	Euro/Valtra Hydraulic
Specification	Specification: MF Red

PartNo	Pos	Qty	Name	Specifications
60107622-19		1	Euro/Valtra Hydraulic	MF Red
60018062	1	4	Pivot Pin	D=40, L=127mm
5219183	2	1	Hose guide	
5006002	3	2	Screw	MVBF 10x30
5219100	4	2	Spacer	
5002077	5	2	Screw	M6S 10x30
5013110	6	4	Washer	BRB 10.5x22x2
5011554	7	4	Nut	Loc-King M10
5002972	8	2	Screw	M6S 10x40 Driloc
5023005	9	2	Greaser	M 10 x 1
5219243	10	1	Protection plate	
60013294	11	1	Cylinder	25/16 L=370-590
1120166	12	2	Banjo fitting	R1/4"
5002055	13	2	Screw	M6S M8x40
5011553	14	4	Nut	M6M M8 Loc-king
5013856	15	4	Dowty washer	Tredo 1/4"
5219049	16	2	Indicator	
5219240	17	2	Sleeve	
60013279	18	1	Hose	1/4" L=1230 1/4Banjo - 1/4GRLM
60013280	19	1	Hose	1/4" L=1380 1/4Banjo - 1/4GRLM
5220094-19	20	1	Tool carrier	MF Red
5219230	21	1	Pin LH	D=30mm
5219231	22	1	Pin RH	D=30mm
5219044	23	2	Pin	D=20mm
5220100	24	2	Adaptor	
5220102	25	2	Pin	
1102001	26	2	Linch pin	

© 2025 Jost