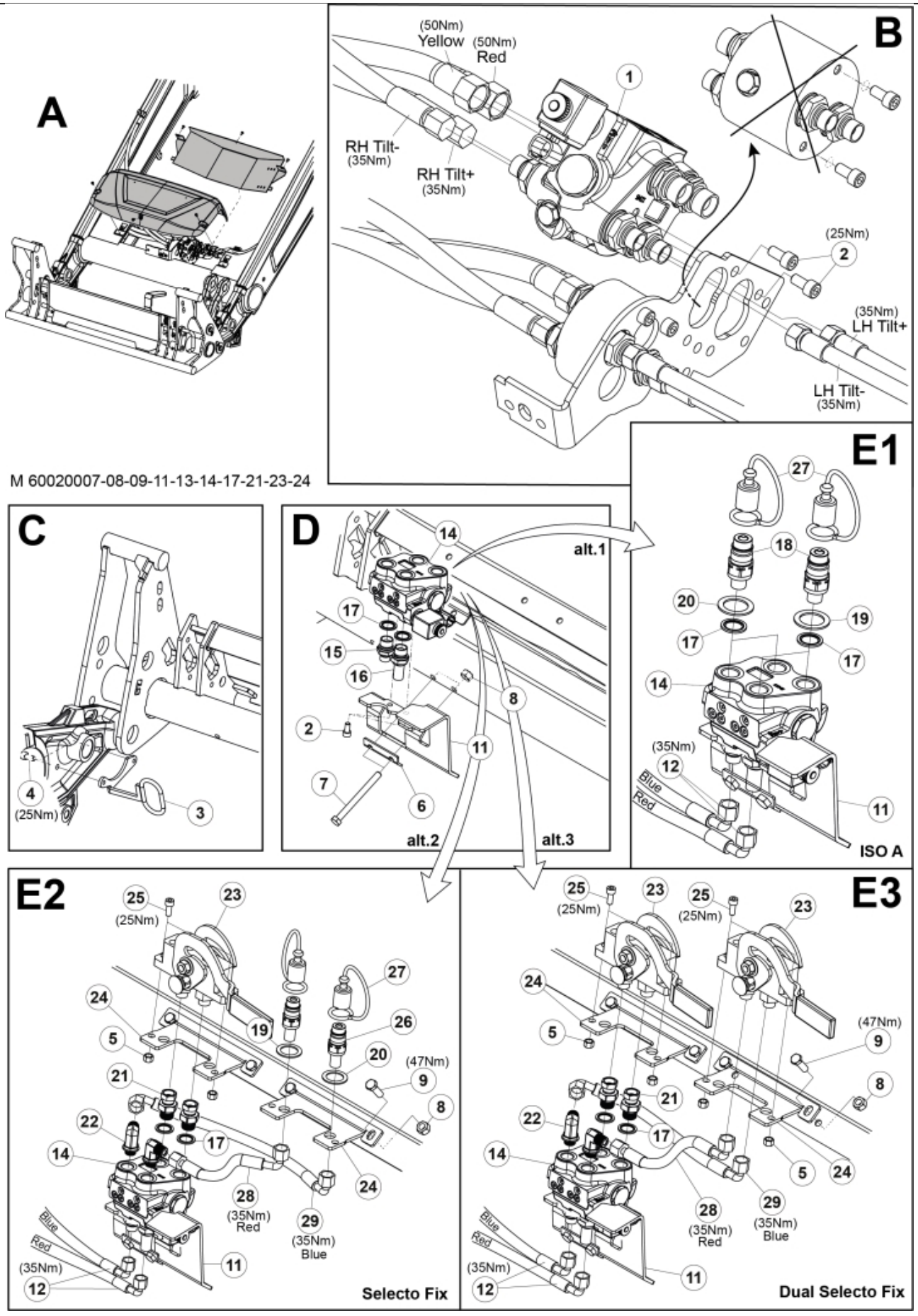
A
B
(50Nm)
Yellow
(50Nm)
Red
RH Tilt-
(35Nm)
RH Tilt+
(35Nm)
(25Nm)
(35Nm)
LH Tilt+
LH Tilt-
(35Nm)
M 60020007-08-09-11-13-14-17-21-23-24
C
(25Nm)
D
alt.1
alt.2
alt.3
E1
(35Nm)
Blue
Red
ISO A
E2
(25Nm)
(47Nm)
(35Nm)
(35Nm)
Red
(35Nm)
Blue
(35Nm)
Selecto Fix
E3
(25Nm)
(25Nm)
(47Nm)
(35Nm)
Red
(35Nm)
Blue
(35Nm)
Dual Selecto Fix

© 2025 Jost

M 60020007-08-09-11-13-14-17-21-23-24_2

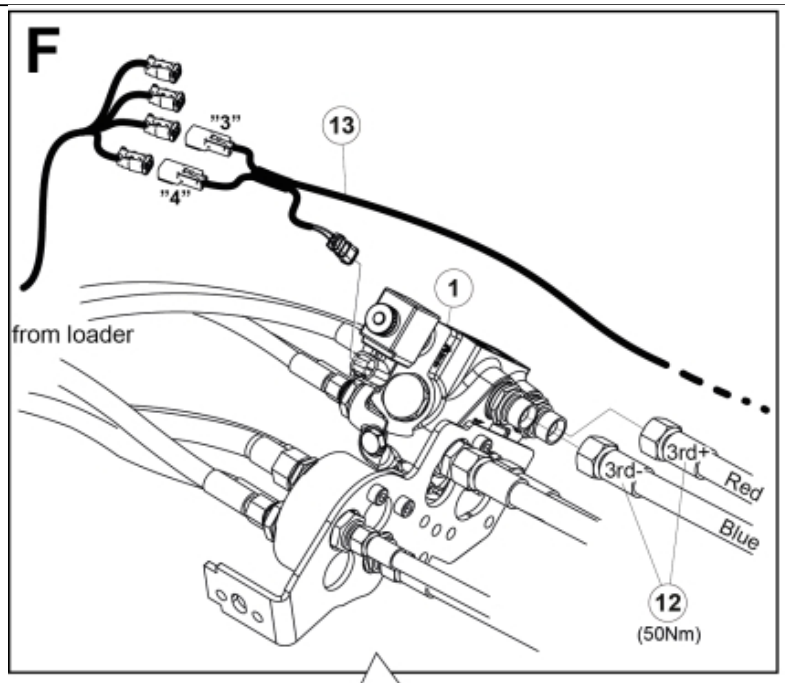

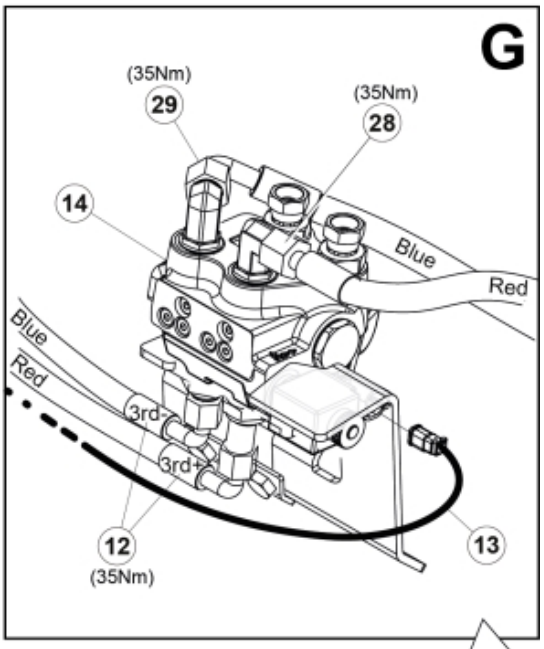

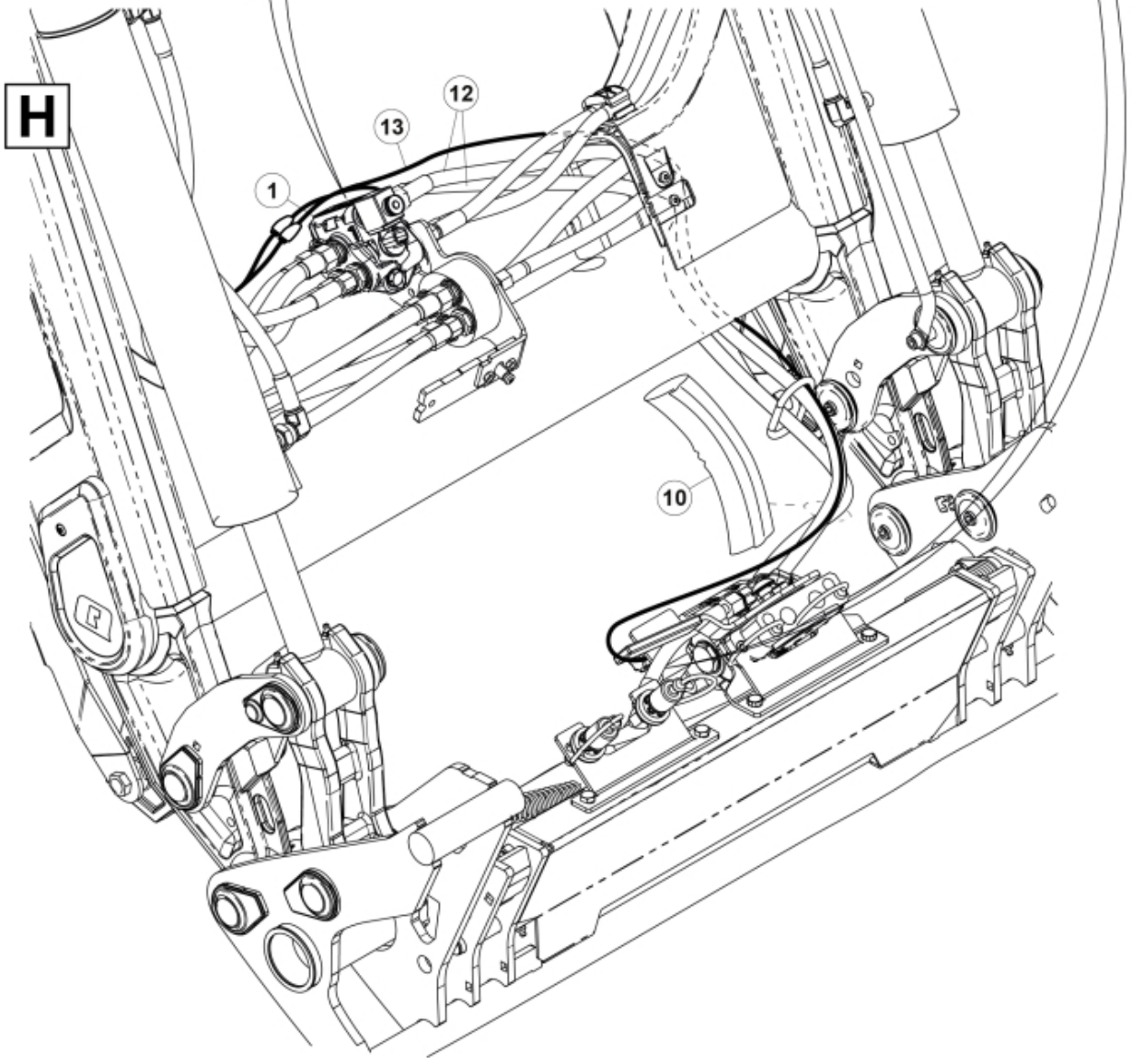

© 2025 Jost

Part assemblies 3rd+4th service, ISO-A

PartNo	Pos	Qty	Name	Specifications
60020007		1	3rd+4th service, ISO-A	
4501092	1	1	Block cpl	3rd service, Replaces 4500105, 3/1/2019 12:00:00 AM
5004919	2	4	Screw	MC6S M8x16
60032284	3	1	Hose guide	
5051492	4	2 PCS	Screw	MC6S M10X30 (8.8)
60018601	6	1	Plate	
5002081	7	2	Screw	M6S M10 x 110 (8.8)
5011554	8	2	Nut	Loc-King M10
60019369	10	1	Hose cover	
60018349	11	1	Bracket	
60014066	12	2	Hose	3/8" L=1260 1/2GRLMA - 3/8G90LMA
60032063	13	1	Cable	4th service. (replaces 60015907)
4501105	14	1	Block cpl	4th service, Replaces 60011052, 3/1/2019 12:00:00 AM (2019/03-)
1120011	15	1	Adaptor	R1/2"-R3/8"
1120158	16	1	Adaptor	R 1/2” - R 3/8”
5013853	17	6	Dowty washer	Tredo 1/2", Part is included in kit 60007907 Hose cpl., 9032177 Hose cpl.
5044131	18	4	Quick Coupling	R 1/2"
5022157	19	2	Washer, red	
5022159	20	2	Washer, blue	
5044129	27	4	Dust Cover	1/2" Male

© 2025 Jost