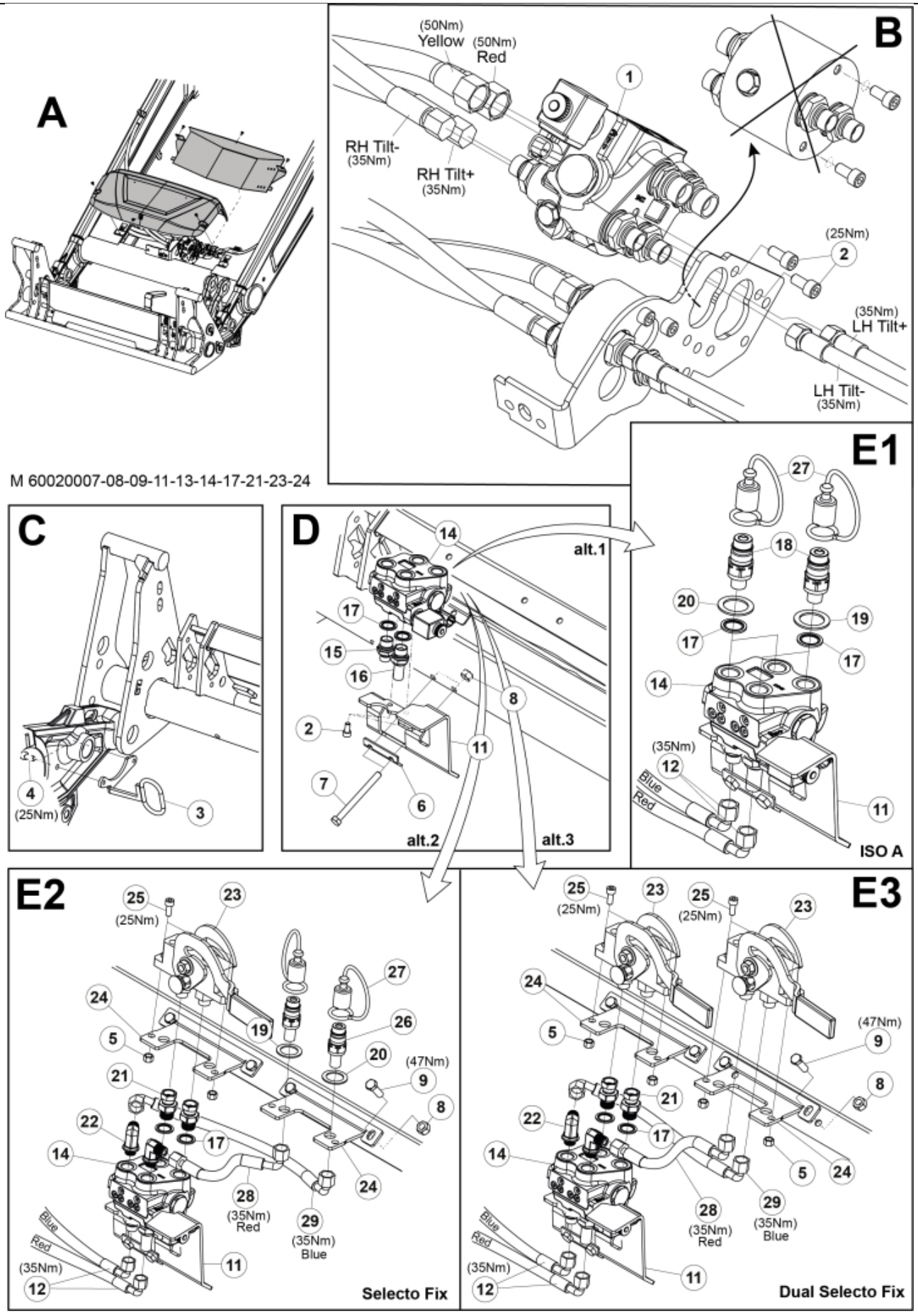
A
B
(50Nm)
Yellow
(50Nm)
Red
RH Tilt-
(35Nm)
RH Tilt+
(35Nm)
(25Nm)
(35Nm)
LH Tilt+
LH Tilt-
(35Nm)
M 60020007-08-09-11-13-14-17-21-23-24
C
(25Nm)
D
alt.1
alt.2
alt.3
E1
(35Nm)
Blue
Red
ISO A
E2
(25Nm)
(47Nm)
(35Nm)
Red
(35Nm)
Blue
(35Nm)
Selecto Fix
E3
(25Nm)
(25Nm)
(47Nm)
(35Nm)
Red
(35Nm)
Blue
(35Nm)
Dual Selecto Fix

© 2025 Jost

M 60020007-08-09-11-13-14-17-21-23-24_2

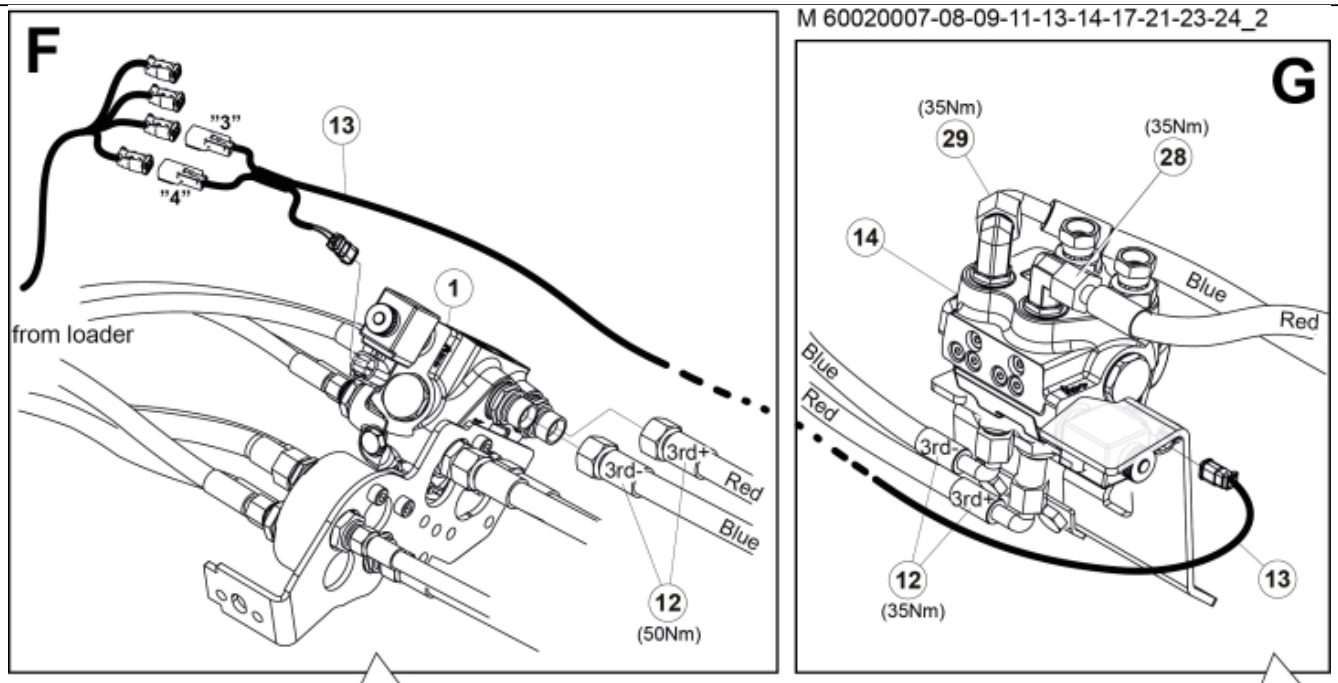

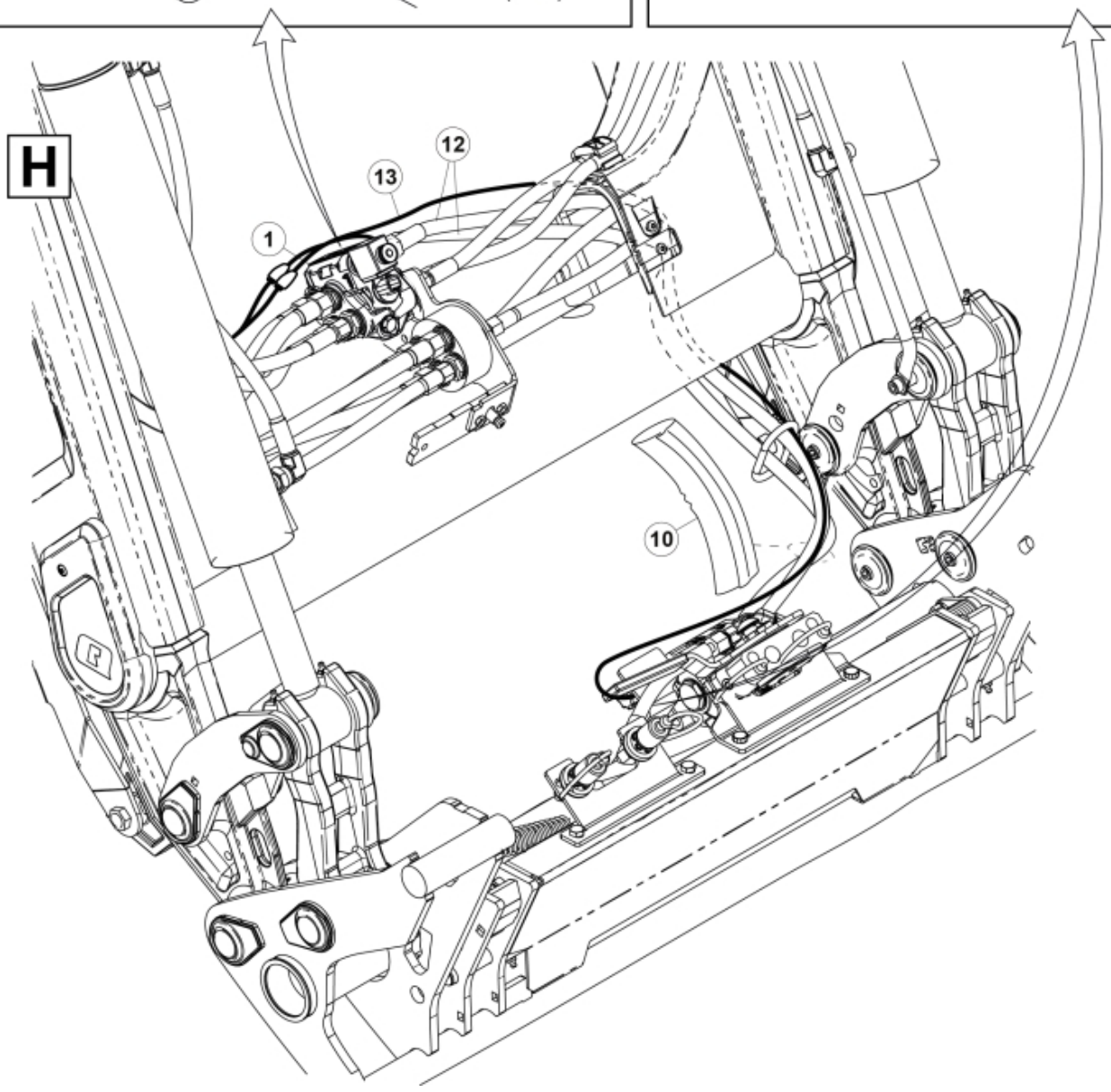

© 2025 Jost

Description	DL
Part assemblies	3rd+4th service, Dual SelectoFix Euro/SMS

PartNo	Pos	Qty	Name	Specifications
60020024		1	3rd+4th service, Dual SelectoFix Euro/SMS	
4501092	1	1	Block cpl	3rd service, Replaces 4500105, 3/1/2019 12:00:00 AM
5004919	2	4	Screw	MC6S M8x16
60032284	3	1	Hose guide	
5051492	4	2 PCS	Screw	MC6S M10X30 (8.8)
5011553	5	2	Nut	M6M M8 Loc-king
60018601	6	1	Plate	
5002081	7	2	Screw	M6S M10 x 110 (8.8)
5011554	8	6	Nut	Loc-King M10
5002077	9	4	Screw	M6S 10x30
60019369	10	1	Hose cover	
60019261	11	1	Bracket	Euro/SMS
60015750	12	2 PCS	Hose	3/8" L=1330 1/2GRLMA - 3/8G90LMA
60032063	13	1	Cable	4th service. (replaces 60015907)
4501105	14	1	Block cpl	4th service, Replaces 60011052, 3/1/2019 12:00:00 AM (2019/03-)
1120011	15	1	Adaptor	R1/2"-R3/8"
1120158	16	1	Adaptor	R 1/2” - R 3/8”
5013853	17	4	Dowty washer	Tredo 1/2", Part is included in kit 60007907 Hose cpl., 9032177 Hose cpl.
60011053	21	2	Adaptor	G1/2" - G3/8"
60014257	22	2	Adaptor	90º
10550369	23	2	Selecto Fix, Lower part	
60018733	24	2	Bracket	Euro/SMS
5004061	25	4	Screw	MC6S M8x20
60019727	28	1	Hose	3/8" L=235 3/8GRLMA - 3/8G90LMC
60019728	29	1	Hose	3/8" L=410 3/8G90LMA - 3/8G90LMA

© 2025 Jost