M 60018071-1

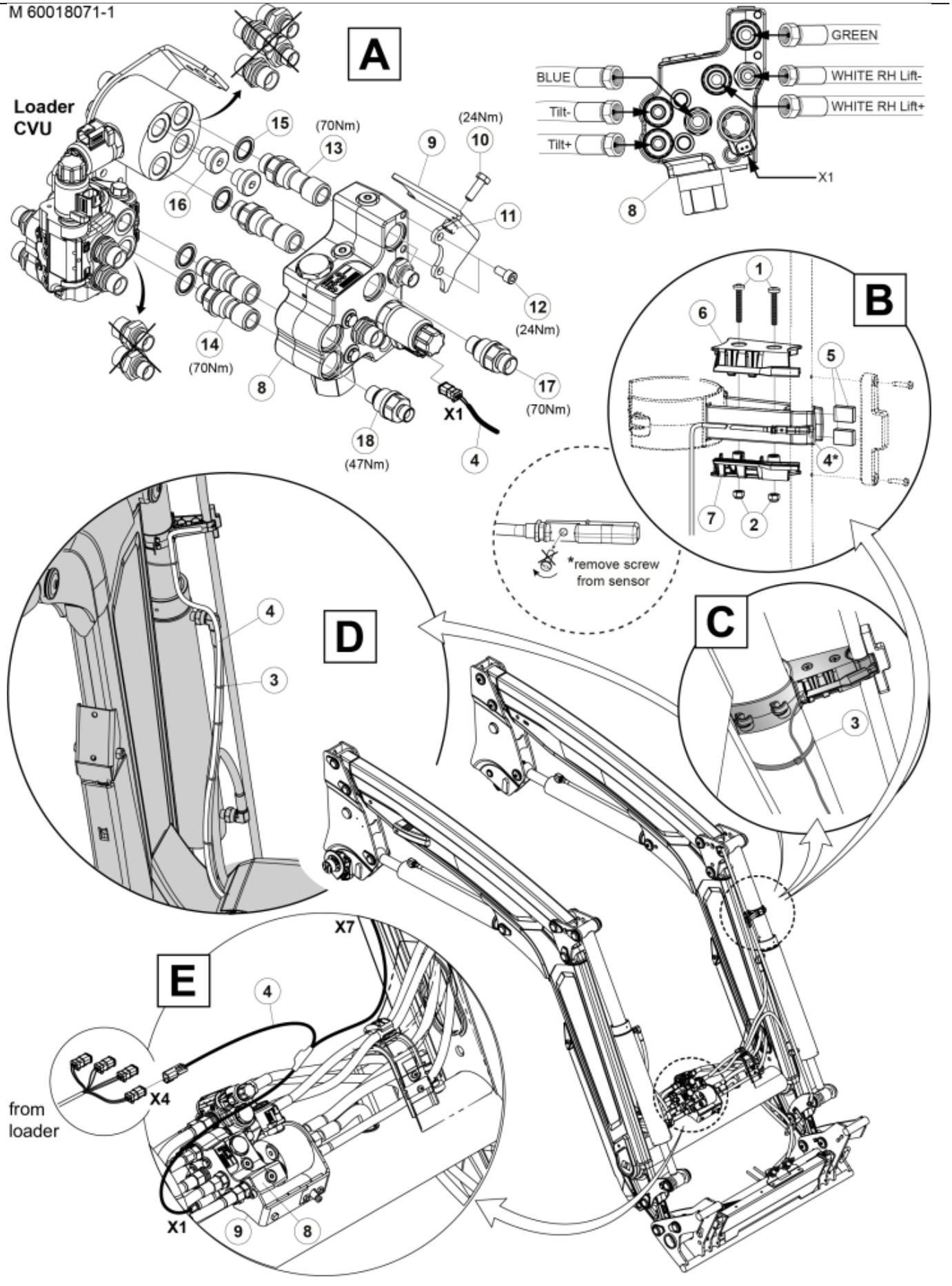



© 2025 Jost

**Part assemblies** Sensor Controlled APC

| PartNo | Pos | Qty | Name | Specifications |
|---|---|---|---|---|
| 60018071 | | 1 | Sensor Controlled APC | |
| 5006034 | 1 | 2 | Screw | 4x25 4.8 fzb |
| 5011935 | 2 | 2 | Nut | |
| 5033621 | 3 | 8 | Cable tie | 4.6x150 |
| 60016951 | 4 | 1 | Harness | Automatic Position Control |
| 5103107 | 5 | 2 | Magnet | |
| 5220736 | 6 | 1 | Bracket | |
| 5220737 | 7 | 1 | Bracket | |
| 4500152 | 8 | 1 | Block cpl | APC 2 |
| 60104326 | 9 | 1 | Bracket | |
| 5002052 | 10 | 1 | Screw | M6S M8x25 |
| 5011553 | 11 | 1 | Nut | M6M M8 Loc-king |
| 5050342 | 12 | 2 | Screw | MC6S M8x14 (8.8) |
| 60104394 | 13 | 2 | Adaptor | APC Long |
| 60104395 | 14 | 2 | Adaptor | APC Short |
| 5013853 | 15 | 4 | Dowty washer | Tredo 1/2", Part is included in kit 60007907 Hose cpl., 9032177 Hose cpl. |
| 5028245 | 16 | 2 | Plug | G1/2" |
| 60104393 | 17 | 2 | Adaptor | APC G1/2" |
| 60104396 | 18 | 2 | Adaptor | APC G3/8" |


© 2025 Jost