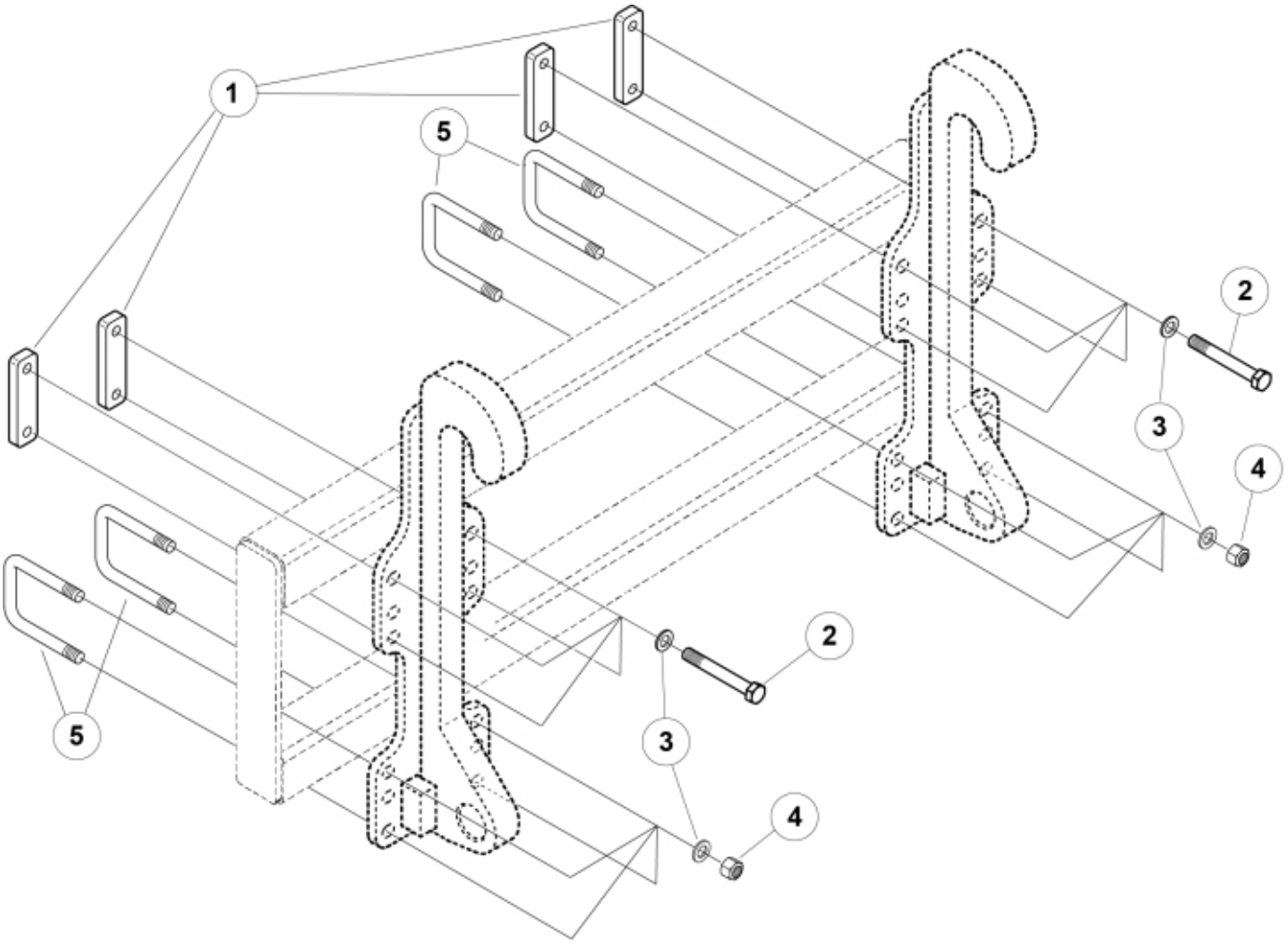

M 60021354

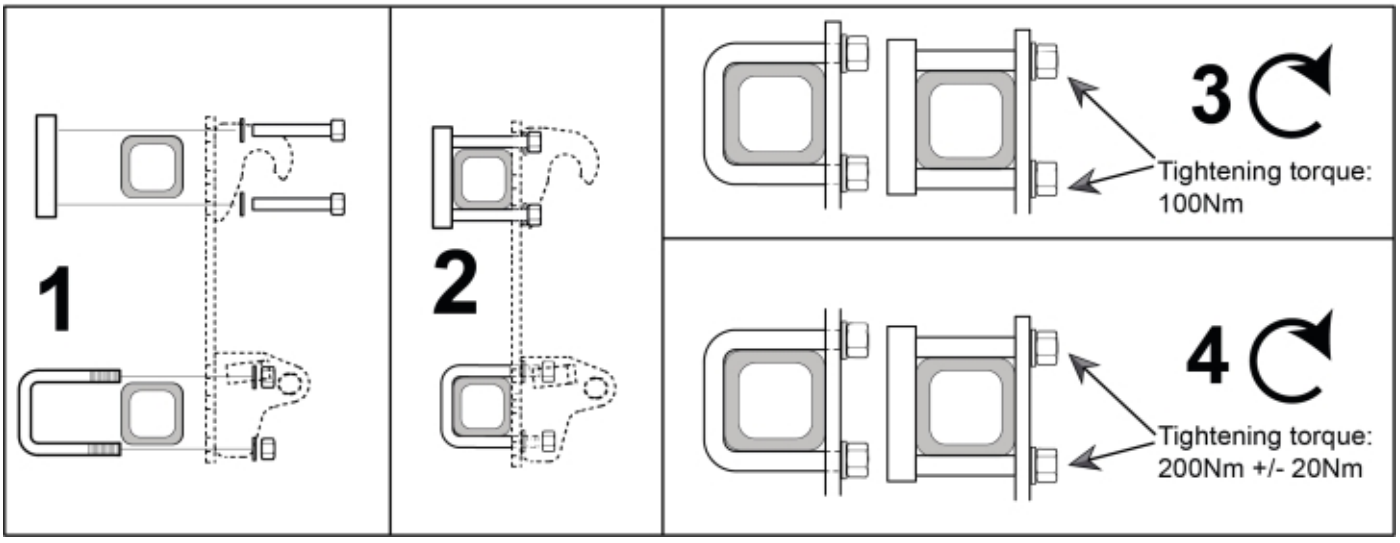

© 2025 Jost

Part assemblies	Bolt kit

PartNo	Pos	Qty	Name	Specifications
60050544	1	4 PCS	Plate	
5050810	2	8	Screw	M6S M16x120
5013105	3	16	Washer	BRB 17 x 30 x 3 300HV
5011557	4	8	Nut	Loc-King M16
60020469	5	4	U-bolt	80x80 M16 (60003288)

© 2025 Jost