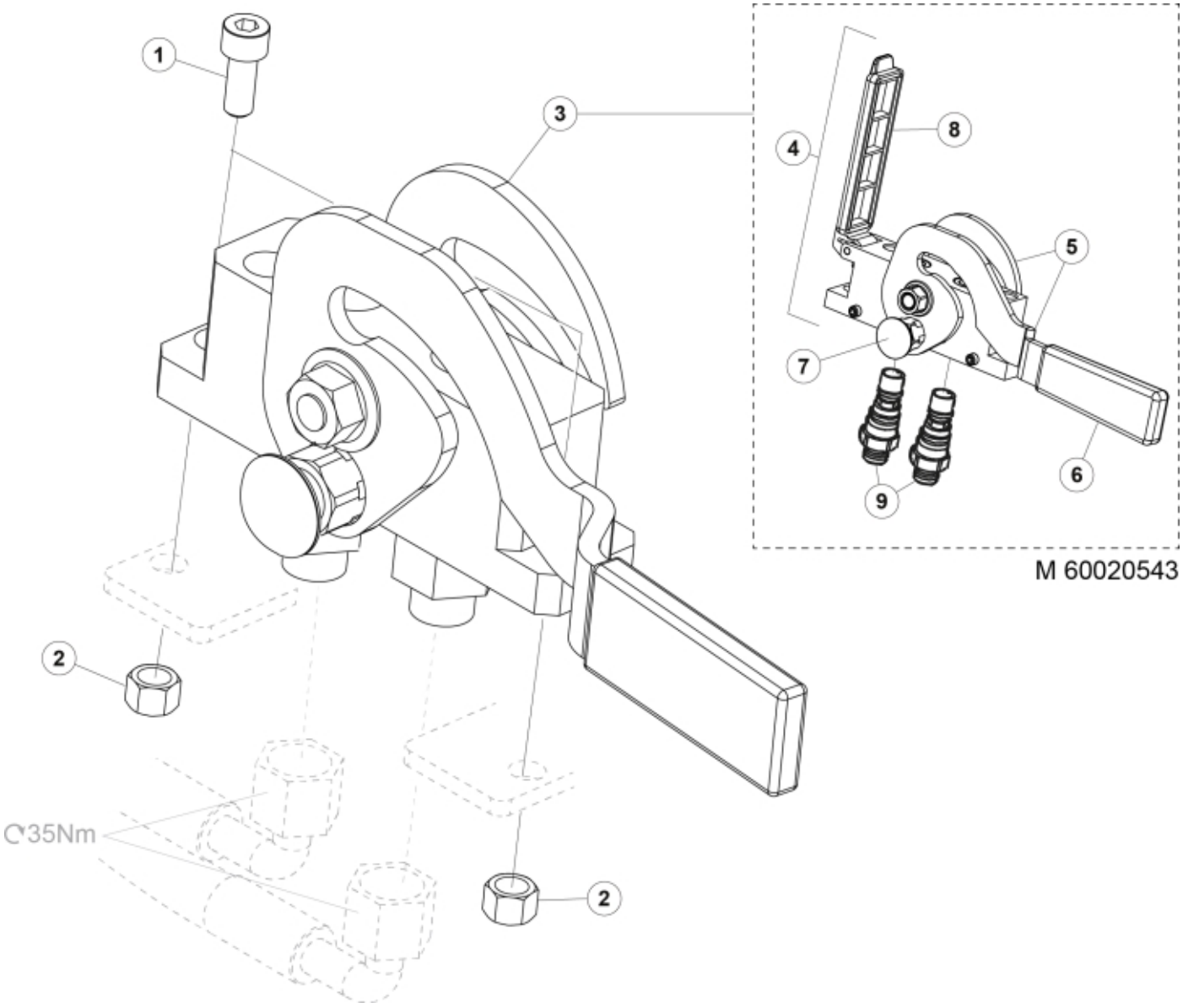



© 2025 Jost

**Part assemblies** Selecto Fix, Lower part

| PartNo | Pos | Qty | Name | Specifications |
|---|---|---|---|---|
| 5004061 | 1 | 2 | • Screw | MC6S M8x20 |
| 5011553 | 2 | 2 | • Nut | M6M M8 Loc-king |
| 10550369 | 3 | 1 | • Selecto Fix, Lower part | |
| 4500838 | 4 | 1 | •• Housing cpl. | |
| 10550206 | 5 | 1 | •• Handle | |
| 10550207 | 6 | 1 | ••• Hand grip | |
| 4501199 | 7 | 1 | •• Safety kit | |
| 10550215 | 8 | 1 | •• Cap | |
| 10550382 | 9 | 2 | •• Coupling 3/8" (F) | 3/8" |


© 2025 Jost