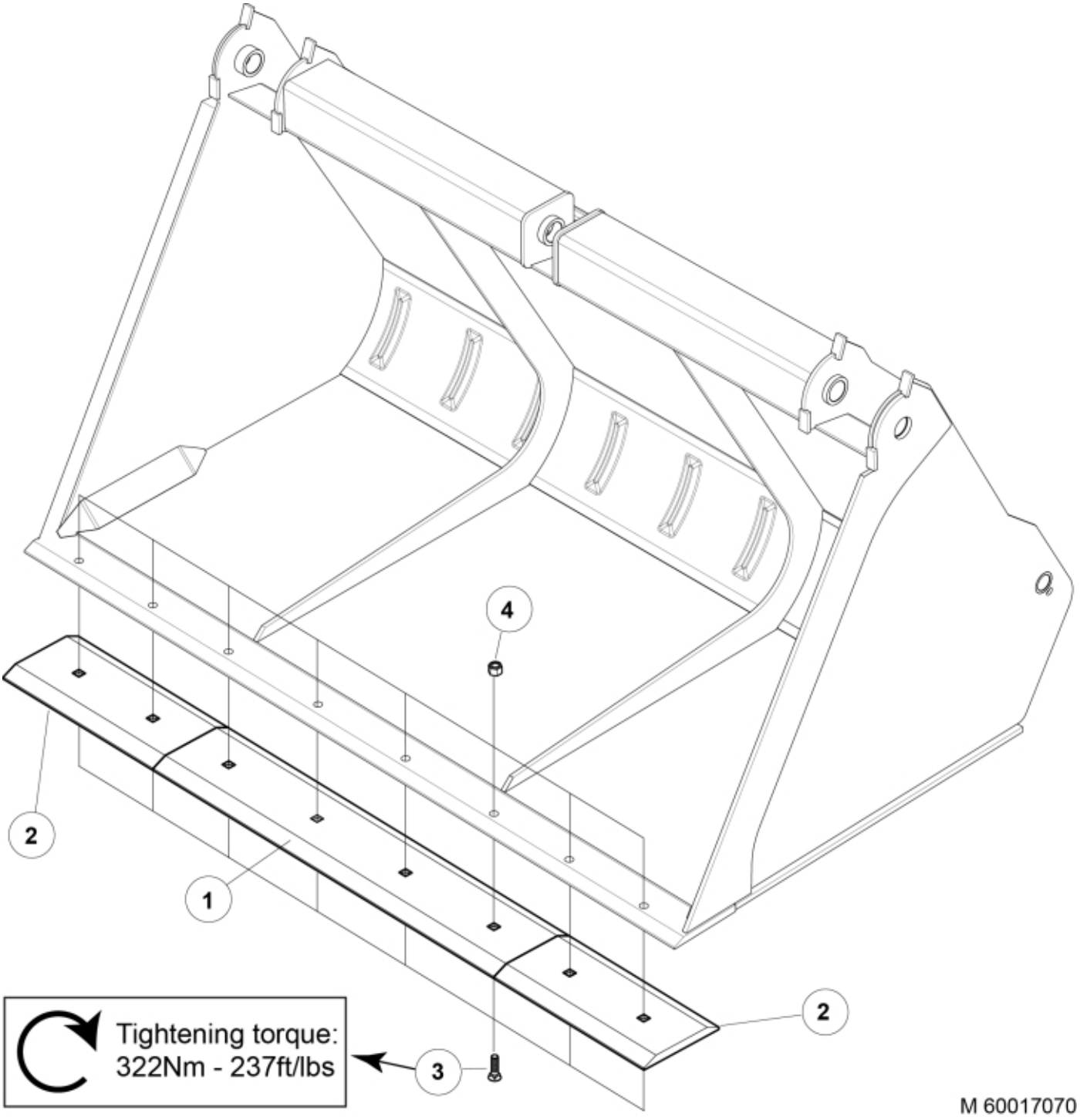

© 2025 Jost

Description	220
Part assemblies	Bolt on Cutting Edge kit

PartNo	Pos	Qty	Name	Specifications
60017070			Bolt on Cutting Edge kit	
60017064-22	1	1 PCS	Cutting edge	Centre
60016510-22	2	2 PCS	Cutting edge	Outer
5050650	3	8 PCS	Plow bolt	3/4" - 2.5 inch
5050652	4	8	Locking nut	UNC 3/4"

© 2025 Jost