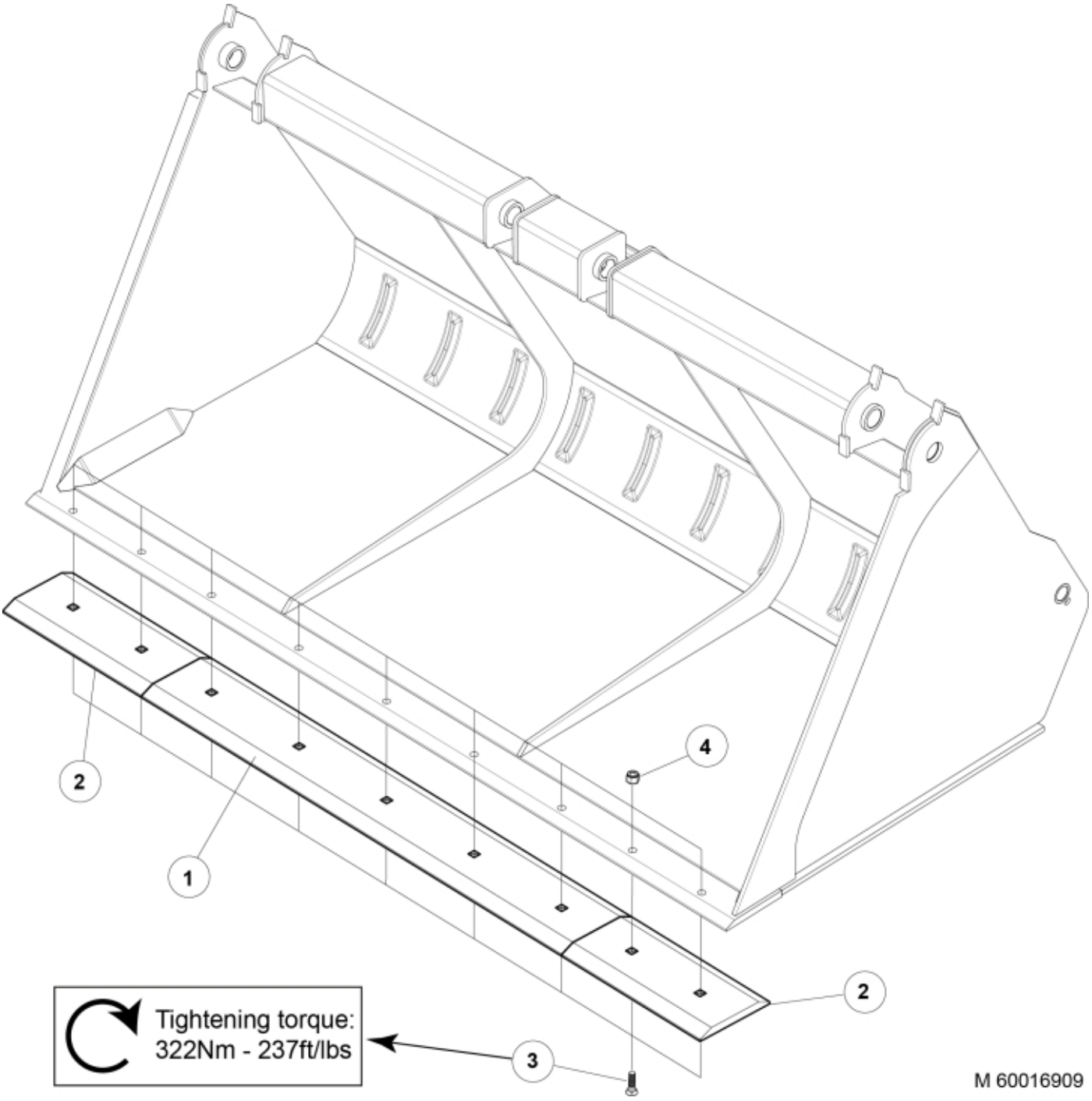

© 2025 Jost

Description	260
Part assemblies	Bolt on Cutting Edge kit

PartNo	Pos	Qty	Name	Specifications
60016909			Bolt on Cutting Edge kit	
60016865-22	1	1 PCS	Cutting edge	Centre
60016510-22	2	2 PCS	Cutting edge	Outer
5050650	3	9 PCS	Plow bolt	3/4" - 2.5 inch
5050652	4	9	Locking nut	UNC 3/4"

© 2025 Jost