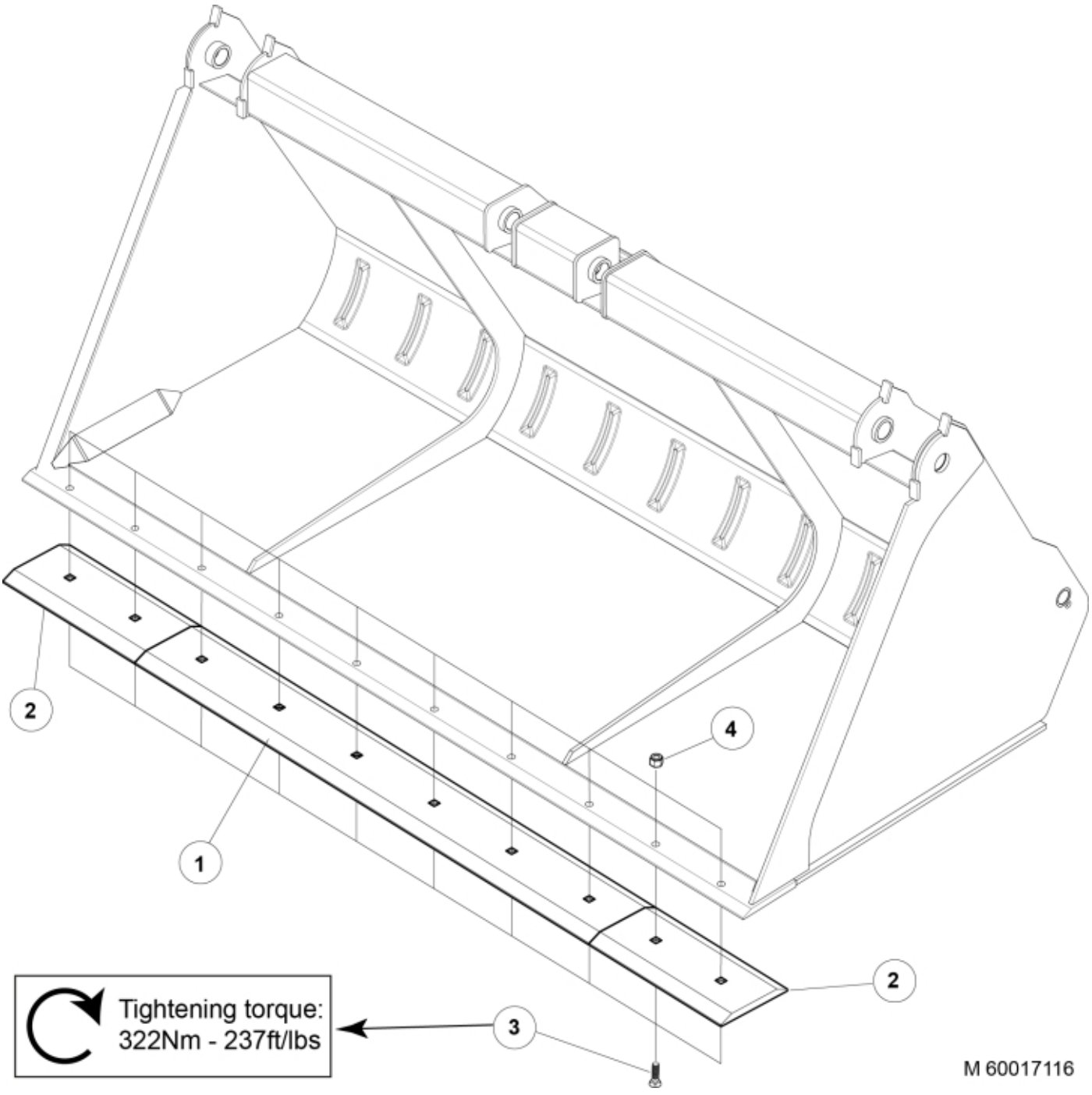

© 2025 Jost

Description	280
Part assemblies	Bolt on Cutting Edge kit

PartNo	Pos	Qty	Name	Specifications
60017116			Bolt on Cutting Edge kit	
60017111-22	1	1 PCS	Cutting edge	Centre
60016510-22	2	2 PCS	Cutting edge	Outer
5050650	3	10 PCS	Plow bolt	3/4" - 2.5 inch
5050652	4	10	Locking nut	UNC 3/4"

© 2025 Jost