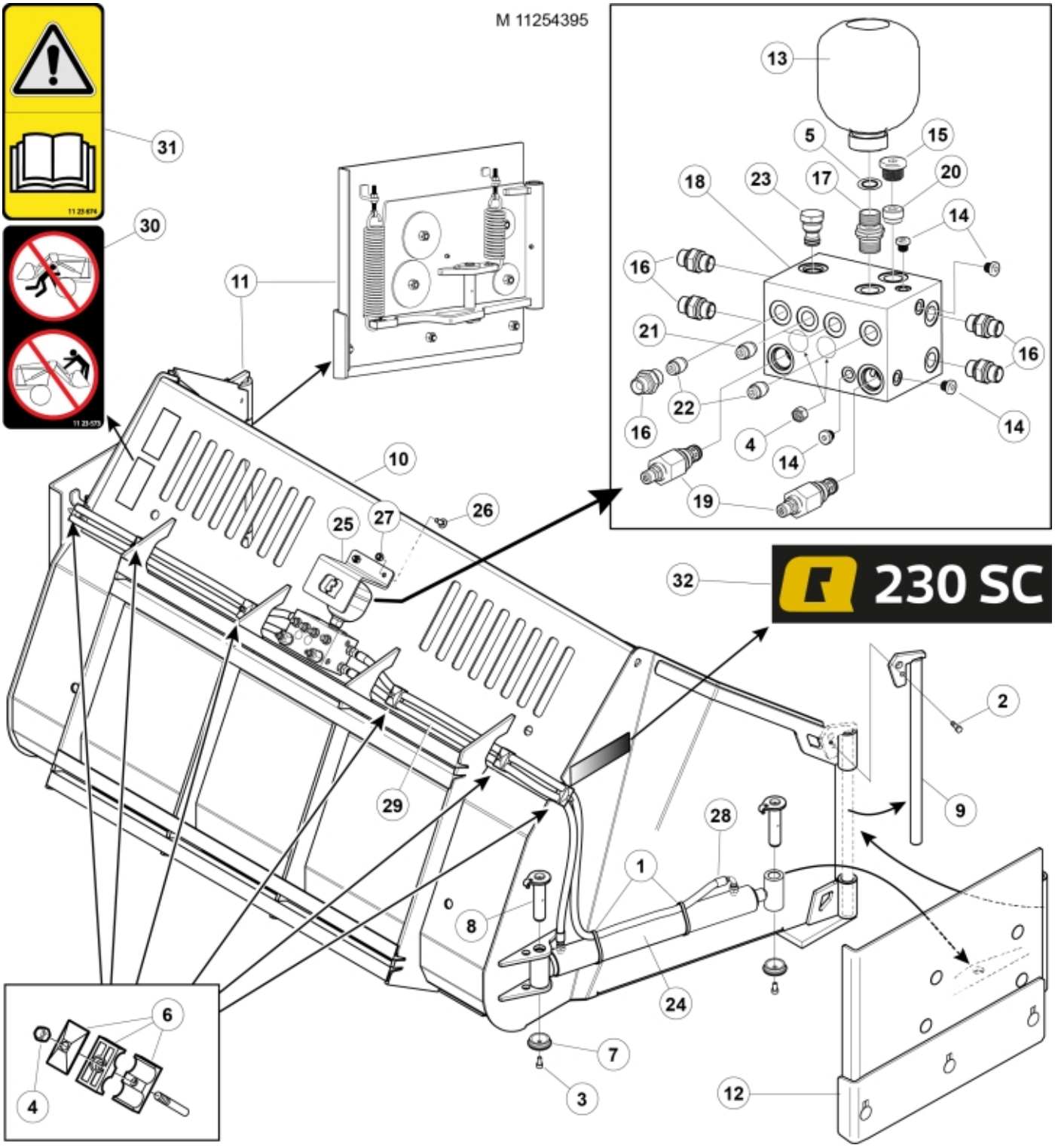
M 11254395
230 SC
1
2
3
4
5
6
7
8
9
10
11
12
13
14
15
16
17
18
19
20
21
22
23
24
25
26
27
28
29
30
31
32

© 2025 Jost

Part assemblies	Special Clearing Bucket, rails
Specification	Year From: 1/1/2017 12:00:00 AM
	Year To: 12/31/2018 12:00:00 AM

PartNo	Pos	Qty	Name	Specifications
11254395			Special Clearing Bucket, rails	1/1/2017 12:00:00 AM, 12/31/2018 12:00:00 AM Replaced by 11255153
1902101	1	4	Cable tie	
5002077	2	2	Screw	M6S 10x30
5004917	3	2	Screw	
5011553	4	8	Nut	M6M M8 Loc-king
5013853	5	1	Dowty washer	Tredo 1/2", Part is included in kit 60007907 Hose cpl., 9032177 Hose cpl.
5016968	6	6	Hose clamp	
5215131	7	2	Locking cover	
60018046	8	2	Pivot Pin	D=30, L=127mm
11251859	9	2 PCS	Rod	
60016924	10	1 PCS	Special Clearing Bucket, rails	NLA
11262548	11	1 PCS	Flap LH cpl.	
11262579	12	1 PCS	Flap RH cpl.	
5050692	13	1 PCS	Accumulator	
5028242	14	4	Plug	G1/8"
5028245	15	1	Plug	G1/2"
5028255	16	8 PCS	Adaptor	G3/8" - G3/8"
5028256	17	1 PCS	Adaptor	G1/2" - G1/2"
5034287	18	1 PCS	Block	
5034288	19	2 PCS	Pressure relief valve	
5034289	20	1 PCS	Check valve	
5034290	21	2 PCS	Restrictor valve	
5034291	22	2 PCS	Restrictor valve	
5034293	23	1 PCS	Plug	
12724610-1	24	2 PCS	Cylinder	
60019954-22	25	1 PCS	Cover plate	
5006002	26	2	Screw	MVBF 10x30
5011554	27	2	Nut	Loc-King M10
60019050			Hose kit	230 SCB
9032290	28	2 PCS	• Hose	3/8" L=1930mm
9032291	29	2 PCS	• Hose	3/8" L=1430mm
1123673	30	1	• Warning decal	
1123674	31	1	•• Warning decal	"Read manual"
11137168	32	2 PCS	•• Decal	230 SC

© 2025 Jost