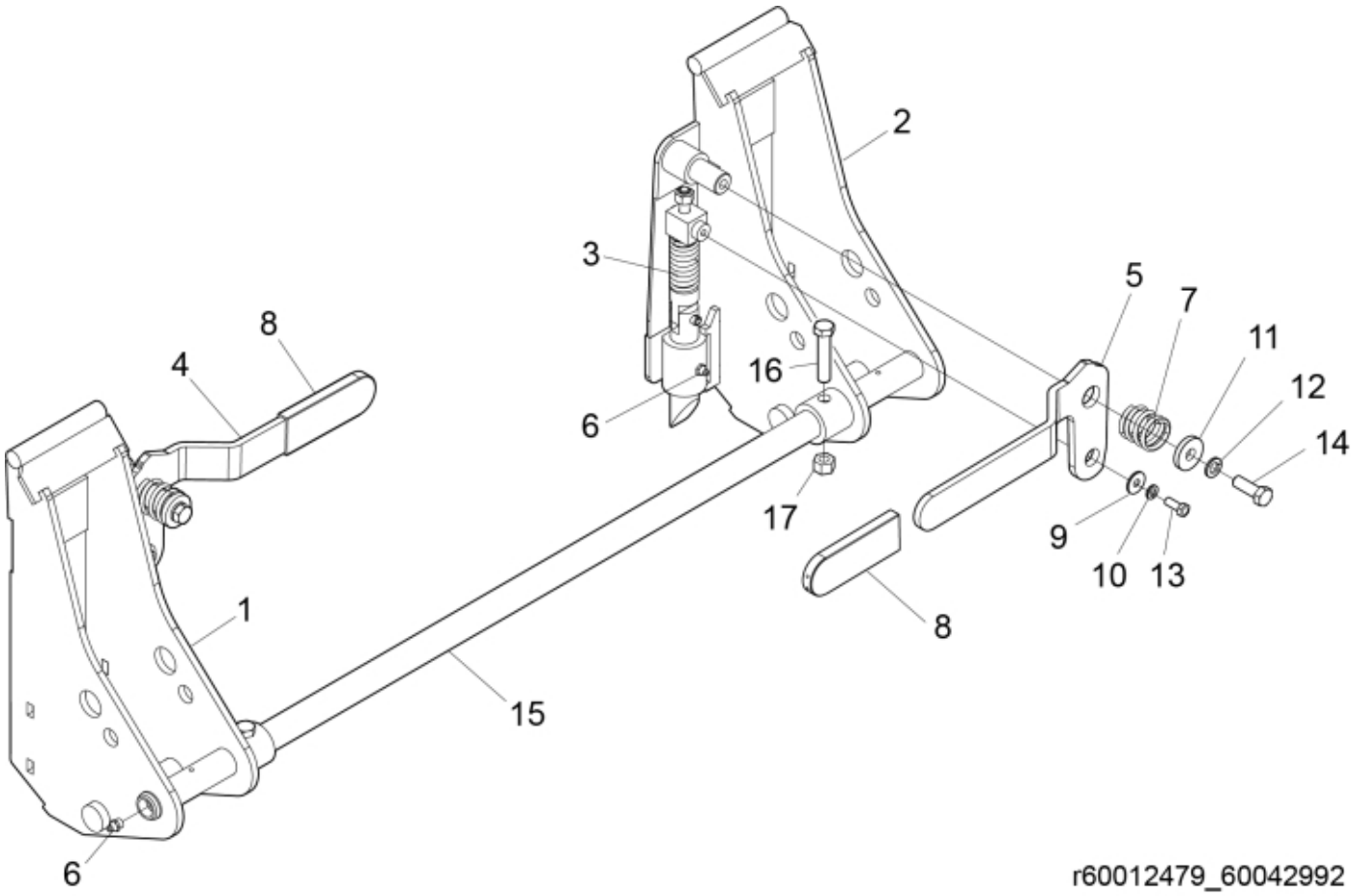

© 2025 Jost

Description	Tool carrier
Part assemblies	Skid Steer
Specification	Specification: 4-link MF Red

PartNo	Pos	Qty	Name	Specifications
60012479-19		1 PCS	Skid Steer	4-link MF Red
60013361-19	1	1 PCS	Tool carrier	LH, MF Red
60013405-19	2	1 PCS	Tool carrier	RH, MF Red
60009527	3	2 PCS	Pin cpl.	
5221533	4	1	Handle LH	
5221534	5	1	Handle RH	
5023005	6	4	Greaser	M 10 x 1
5221539	7	2	Spring	
5022144	8	2	Cover	
5013916	9	2	Washer	8,4x24x2
5013404	10	2	Spring washer	8,1x14,8x2
5013924	11	2	Washer	13x36x6
5013408	12	2	Spring washer	FBB 12,2 x 21,1 x 2,5
5002051	13	2	Screw	M6S 8 x 20
5002103	14	2	Screw	M12 x 35
60016128	15	1 PCS	Shaft	
5002108	16	2	Screw	M6S M12x60
5011555	17	2	Nut	M12 Loc

© 2025 Jost