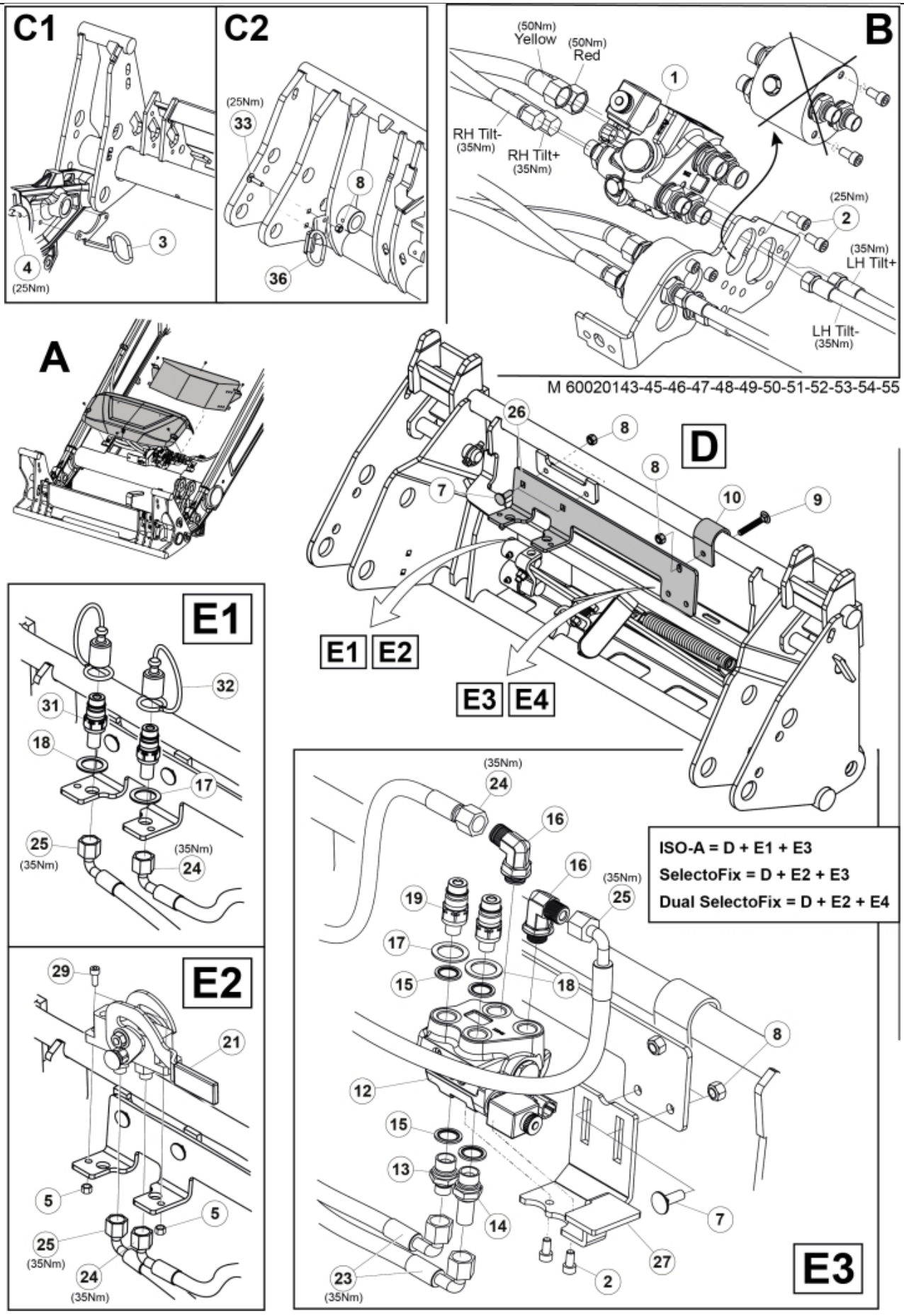
C1
C2
(25Nm)
33
8
36
4
(25Nm)
3
B
(50Nm)
Yellow
(50Nm)
Red
1
RH Tilt-
(35Nm)
RH Tilt+
(35Nm)
(25Nm)
2
(35Nm)
LH Tilt+
LH Tilt-
(35Nm)
M 60020143-45-46-47-48-49-50-51-52-53-54-55
A
D
26
8
8
7
10
9
E1
E2
E3
E4
E1
32
31
18
17
25
(35Nm)
(35Nm)
24
E2
29
21
5
5
25
(35Nm)
24
(35Nm)
(35Nm)
24
16
16
(35Nm)
25
19
17
15
18
8
12
15
13
14
7
27
23
(35Nm)
2
E3
ISO-A = D + E1 + E3
SelectoFix = D + E2 + E3
Dual SelectoFix = D + E2 + E4

© 2025 Jost

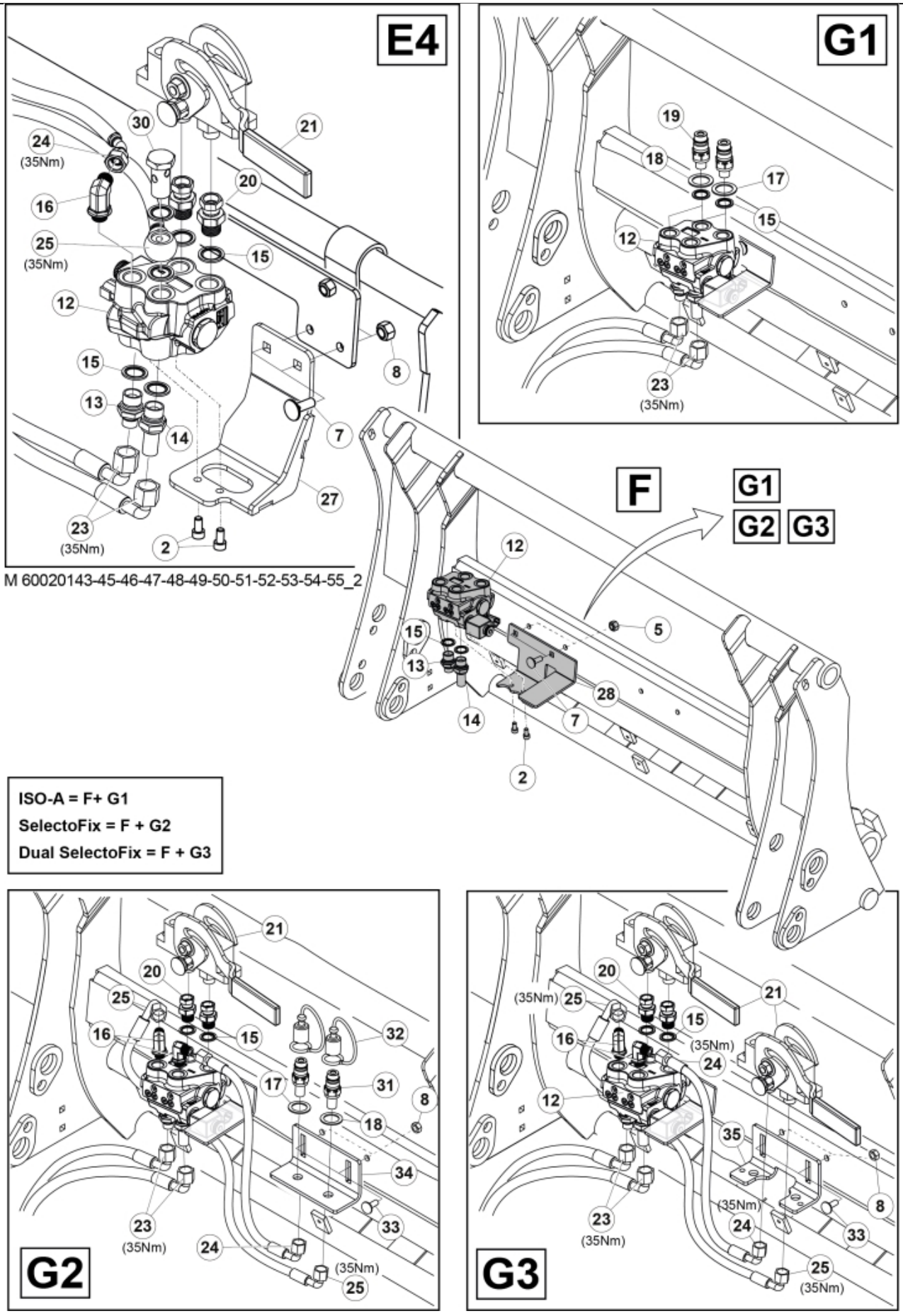

M 60020143-45-46-47-48-49-50-51-52-53-54-55_2

© 2025 Jost

M 60020143-45-46-47-48-49-50-51-52-53-54-55_3

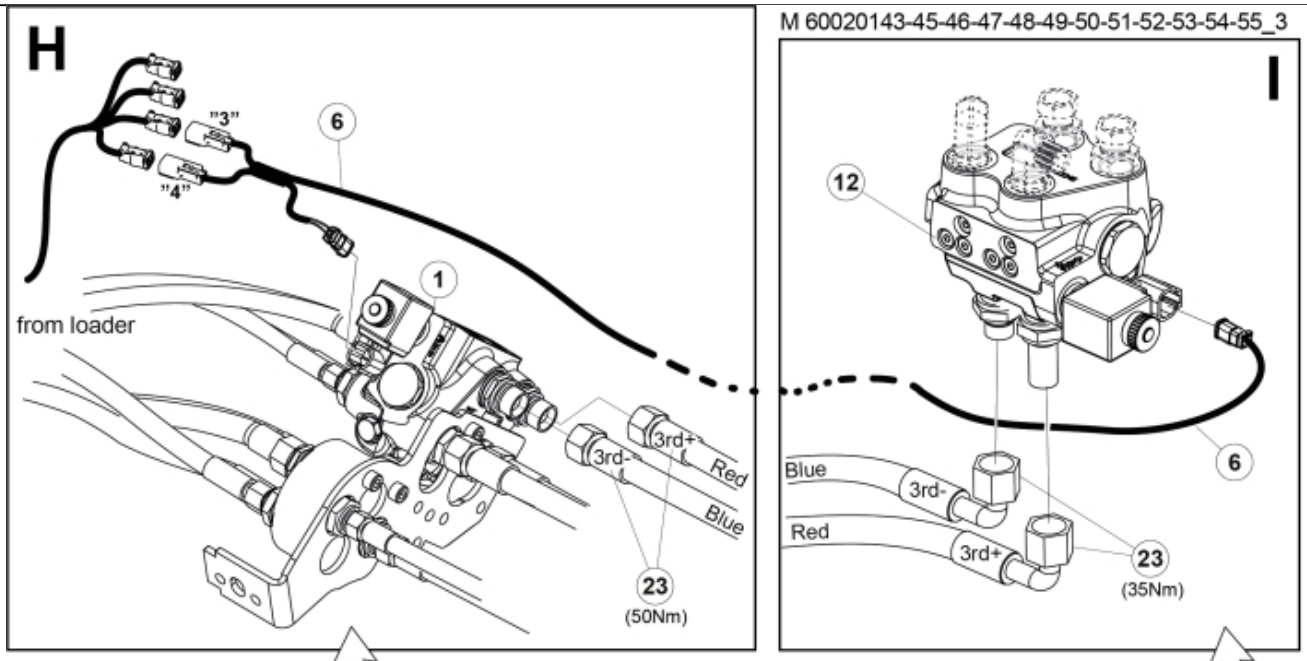

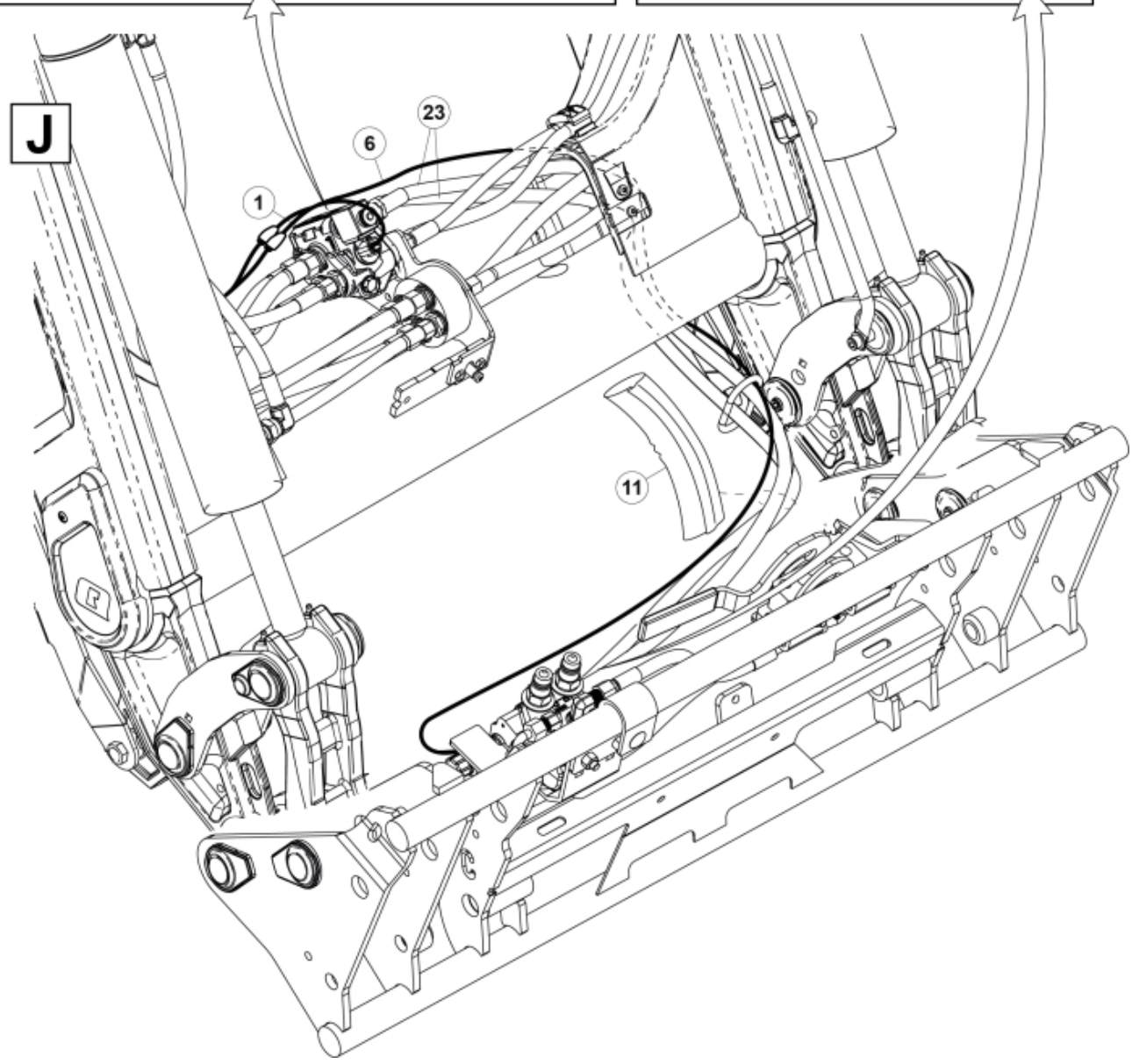

© 2025 Jost

Description	DXL
Part assemblies	3rd+4th service, ISO-A

PartNo	Pos	Qty	Name	Specifications
60020147		1	3rd+4th service, ISO-A	
4501092	1	1	Block cpl	3rd service, Replaces 4500105, 3/1/2019 12:00:00 AM
5004919	2	4	Screw	MC6S M8x16
60032284	3	1	Hose guide	
5050608	4	2	Screw	MC6S M10x20 Loc
60032063	6	1	Cable	4th service. (replaces 60015907)
5006002	7	4	Screw	MVBF 10x30
5011554	8	5	Nut	Loc-King M10
60014337	9	1	Screw	M10x70 MVBF
60014154	10	1	Bracket	
60019369	11	1	Hose cover	
4501105	12	1	Block cpl	4th service, Replaces 60011052, 3/1/2019 12:00:00 AM
1120011	13	1	Adaptor	R1/2"-R3/8"
1120158	14	1	Adaptor	R 1/2” - R 3/8”
5013853	15	4	Dowty washer	Tredo 1/2", Part is included in kit 60007907 Hose cpl., 9032177 Hose cpl.
60014257	16	2	Adaptor	90º
5022157	17	2	Washer, red	
5022159	18	2	Washer, blue	
5044131	19	2	Quick Coupling	R 1/2"
60014360	23	2 PCS	Hose	3/8" L=1880 1/2GRLMA - 3/8G90LMA
60014375	24	1	Hose	3/8" L=350 3/8GRLMA - 3/8G90LMA
60014364	25	1	Hose	3/8" L=640 3/8G90LMA - 3/8G90LMA
60013896	26	1	Bracket	
60013895	27	1	Bracket	
5044940	31	2	Coupling	ISO-A 1/2" Male - G3/8
5044129	32	2	Dust Cover	1/2" Male

© 2025 Jost