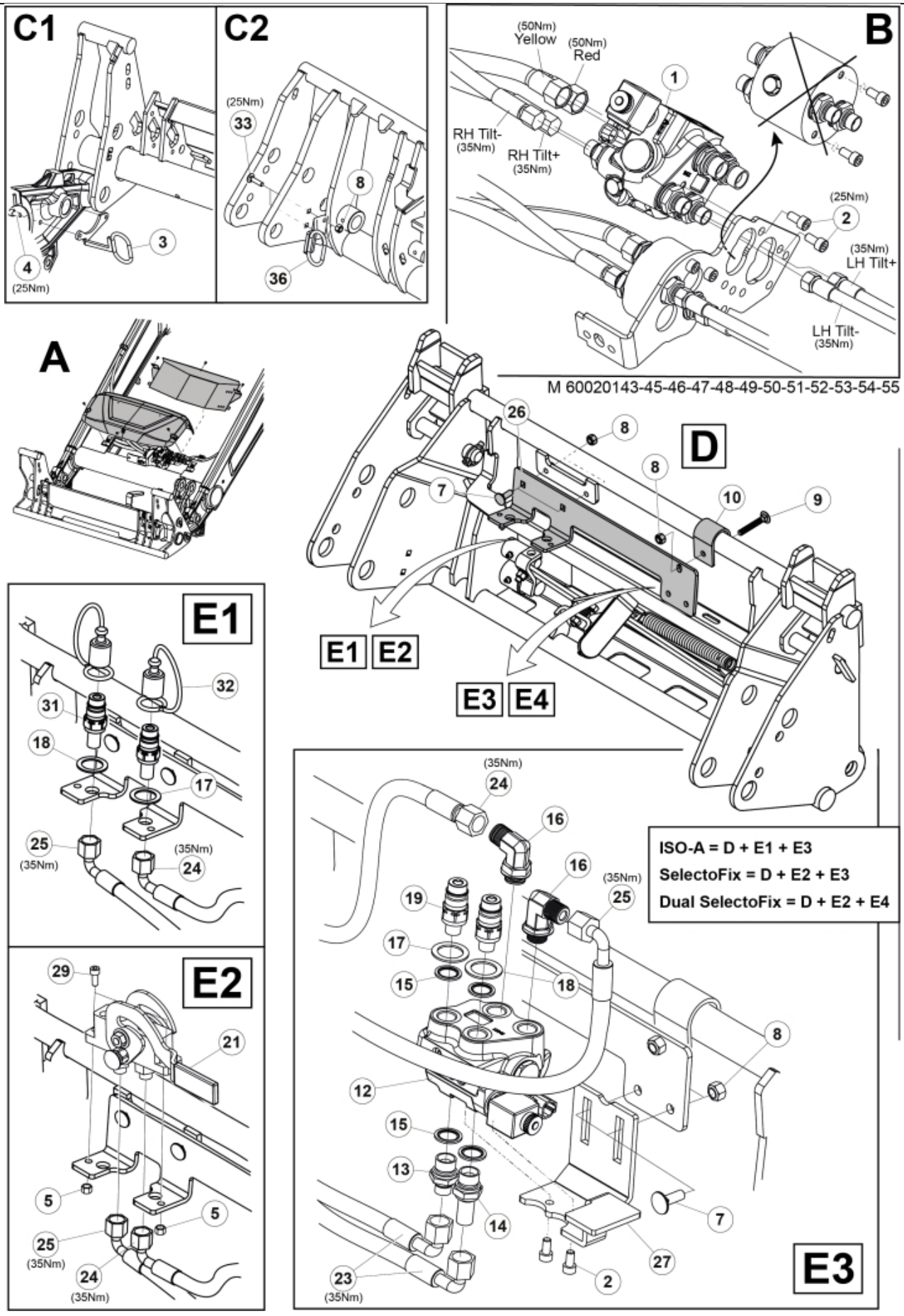
C1
C2
(25Nm)
33
8
36
4
(25Nm)
3
B
(50Nm)
Yellow
(50Nm)
Red
1
RH Tilt-
(35Nm)
RH Tilt+
(35Nm)
(25Nm)
2
(35Nm)
LH Tilt+
LH Tilt-
(35Nm)
M 60020143-45-46-47-48-49-50-51-52-53-54-55
A
D
26
8
8
7
10
9
E1
E2
E3
E4
E1
32
31
18
17
25
(35Nm)
(35Nm)
24
E2
29
21
5
5
25
(35Nm)
24
(35Nm)
(35Nm)
24
16
16
(35Nm)
25
19
17
15
18
8
12
15
13
14
7
27
23
(35Nm)
2
E3
ISO-A = D + E1 + E3
SelectoFix = D + E2 + E3
Dual SelectoFix = D + E2 + E4

© 2025 Jost

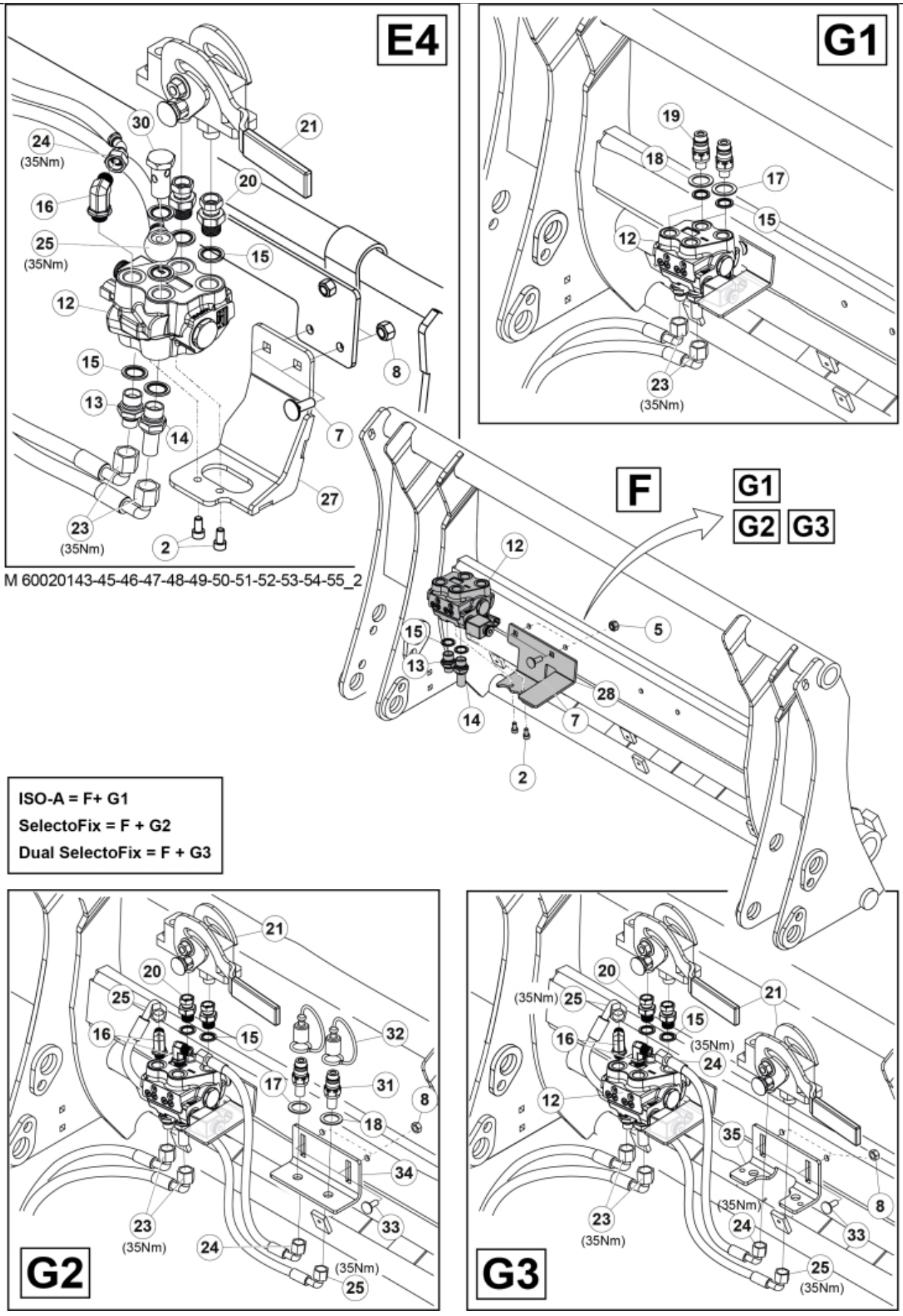

M 60020143-45-46-47-48-49-50-51-52-53-54-55_2

© 2025 Jost

M 60020143-45-46-47-48-49-50-51-52-53-54-55_3

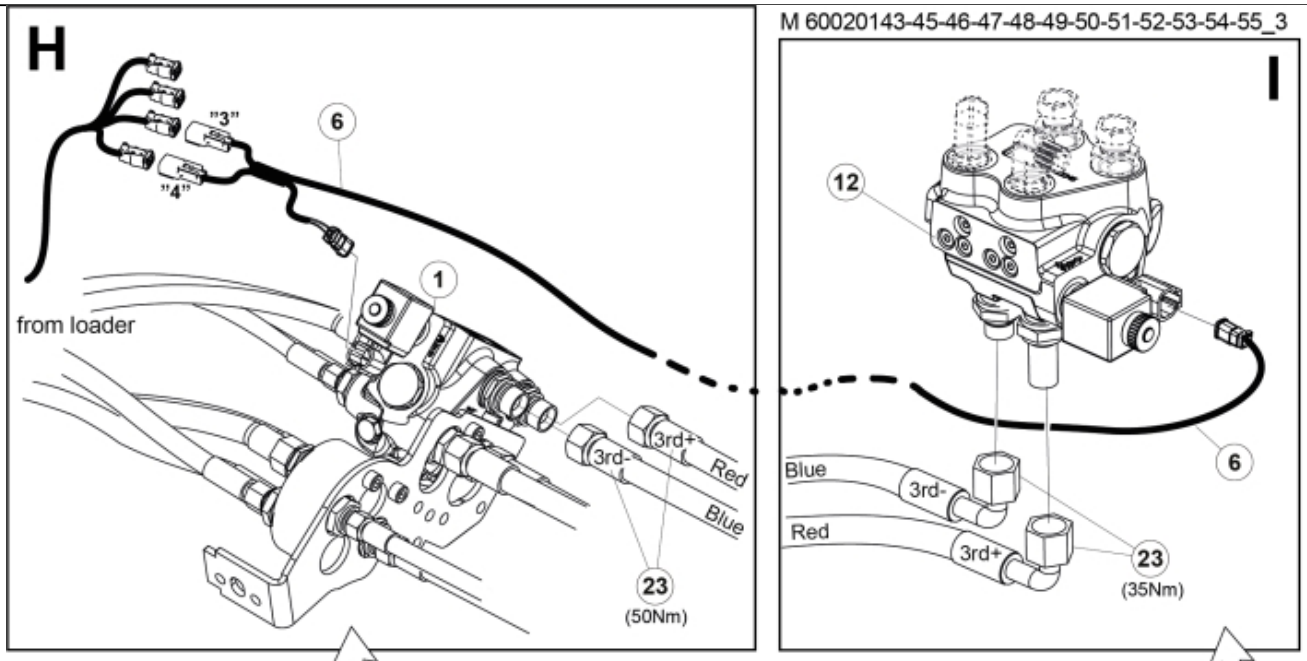

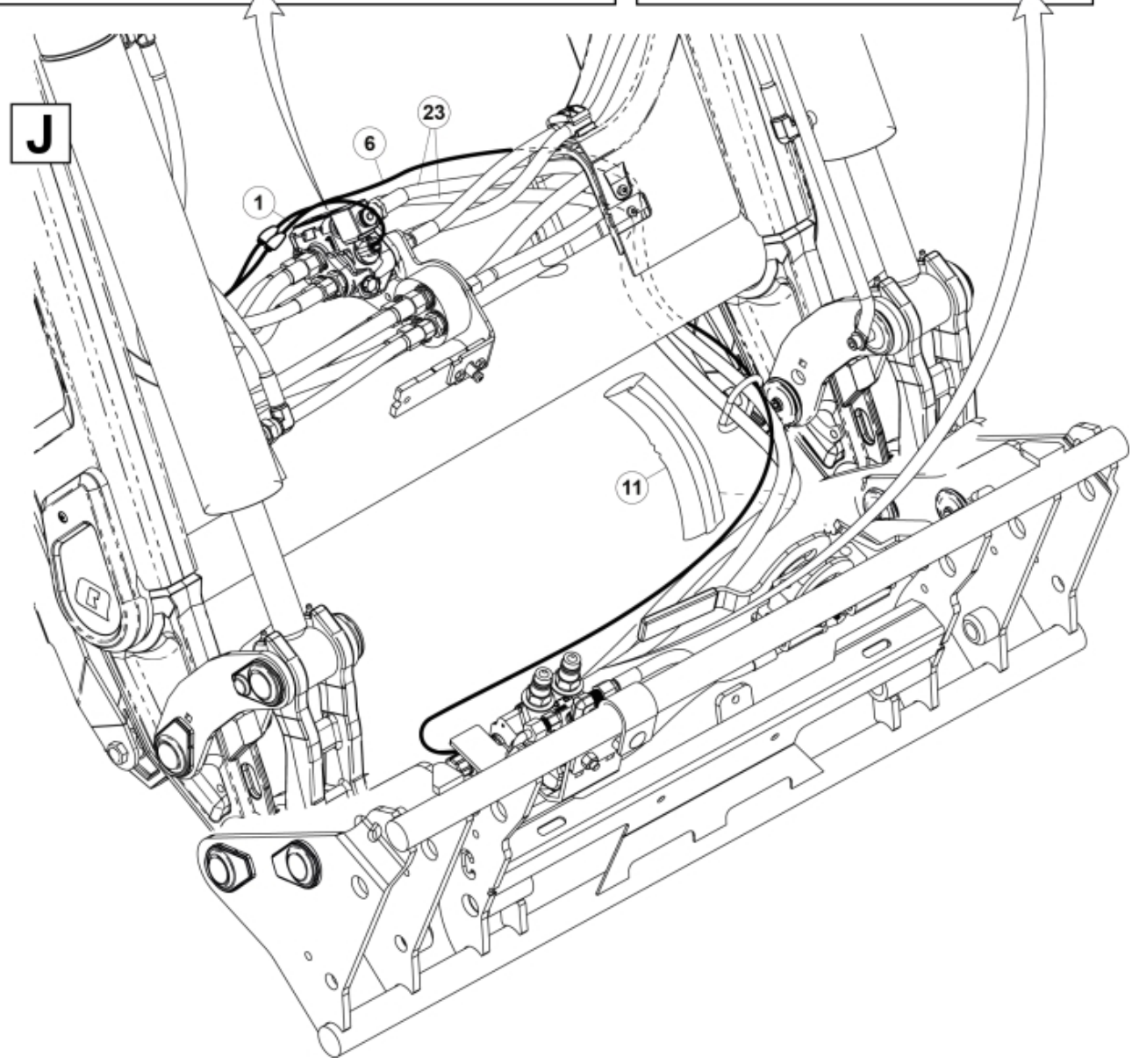

© 2025 Jost

Part assemblies 3rd+4th service, Dual SelectoFix

PartNo	Pos	Qty	Name	Specifications
60020152		1	3rd+4th service, Dual SelectoFix	
4501092	1	1	Block cpl	3rd service, Replaces 4500105, 3/1/2019 12:00:00 AM
5004919	2	4	Screw	MC6S M8x16
60032284	3	1	Hose guide	
5051492	4	2 PCS	Screw	MC6S M10X30 (8.8)
5011553	5	2	Nut	M6M M8 Loc-king
60032063	6	1	Cable	4th service. (replaces 60015907)
5006002	7	4	Screw	MVBF 10x30
5011554	8	5	Nut	Loc-King M10
60014337	9	1	Screw	M10x70 MVBF
60014154	10	1	Bracket	
60019369	11	1	Hose cover	
4501105	12	1	Block cpl	4th service, Replaces 60011052, 3/1/2019 12:00:00 AM
1120011	13	1	Adaptor	R1/2"-R3/8"
1120158	14	1	Adaptor	R 1/2” - R 3/8”
5013853	15	6	Dowty washer	Tredo 1/2", Part is included in kit 60007907 Hose cpl., 9032177 Hose cpl.
60014257	16	1	Adaptor	90º
60011053	20	2	Adaptor	G1/2" - G3/8"
10550369	21	2	Selecto Fix, Lower part	
60014413	23	2	Hose	3/8" L=1540 1/2GRLMA - 3/8G90LMA
60021571	24	1	Hose	3/8" L=315 3/8GRLMA - 3/8G90LMC
60021569	25	1	Hose	3/8" L=425 3/8G90LM - 1/2GBanjo
60013896	26	1	Bracket	
60021160	27	1	Bracket	
5004061	29	2	Screw	MC6S M8x20
1120241	30	1	Hollow screw	

© 2025 Jost