Quicke

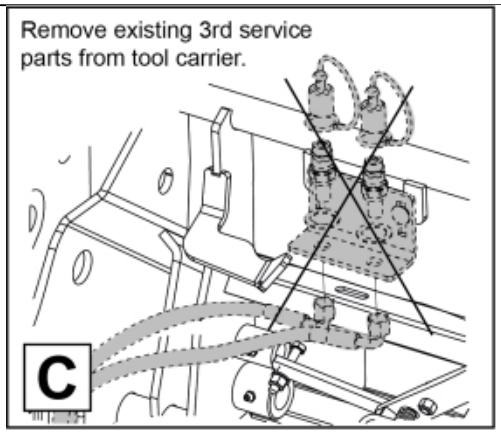

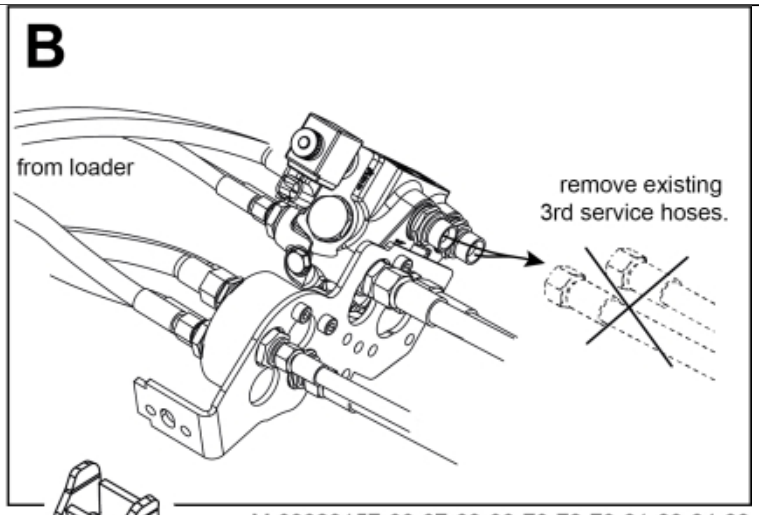

M 60020157-66-67-68-69-70-72-79-81-83-84-88

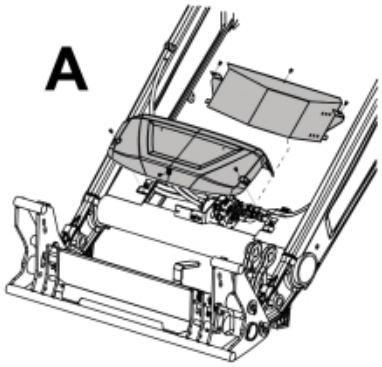

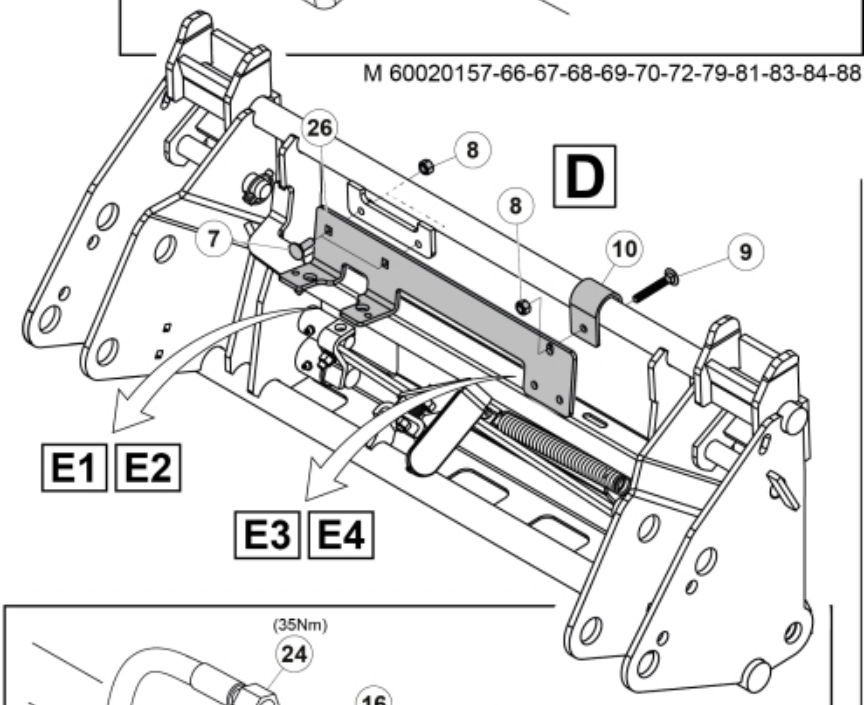

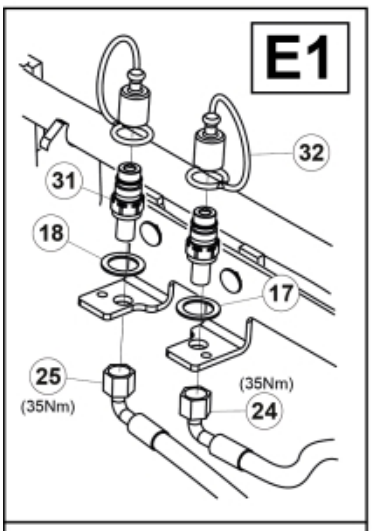

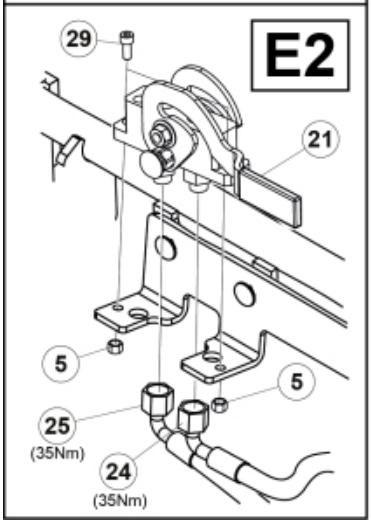

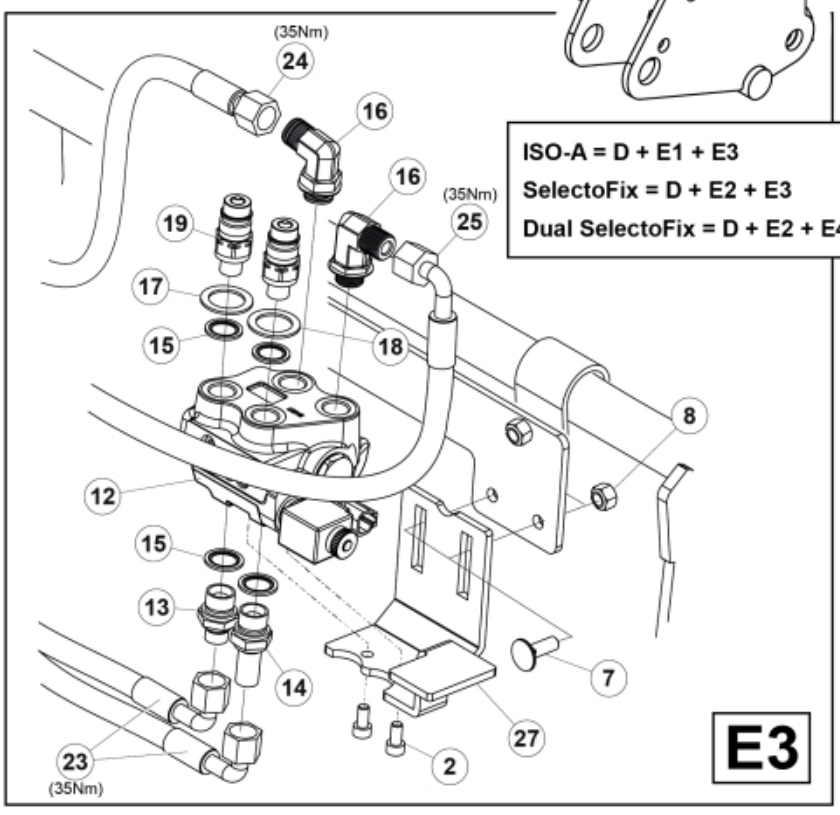

ISO-A = D + E1 + E3
SelectoFix = D + E2 + E3
Dual SelectoFix = D + E2 + E4

© 2025 Jost

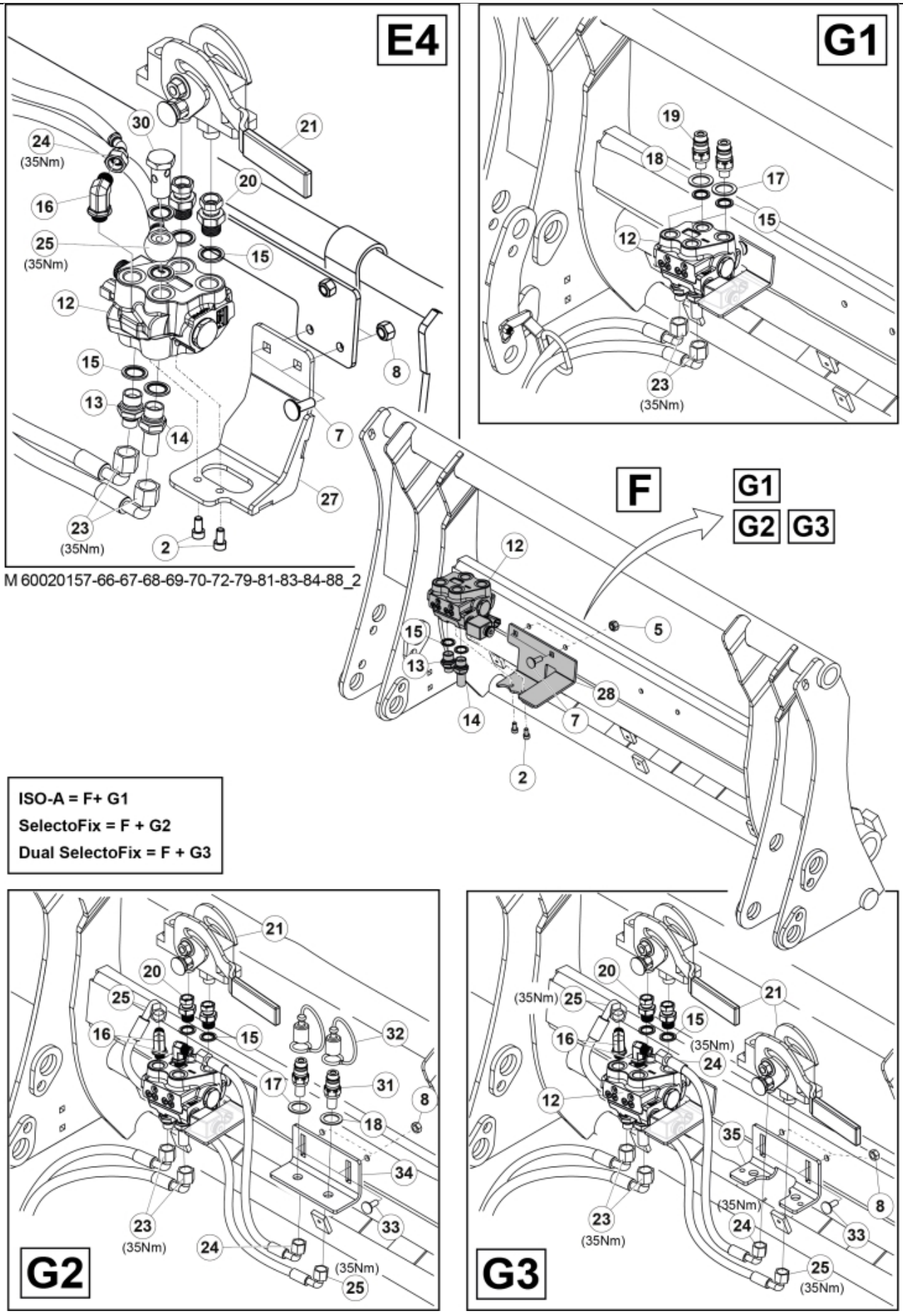

M 60020157-66-67-68-69-70-72-79-81-83-84-88_2

© 2025 Jost

M 60020157-66-67-68-69-70-72-79-81-83-84-88_3

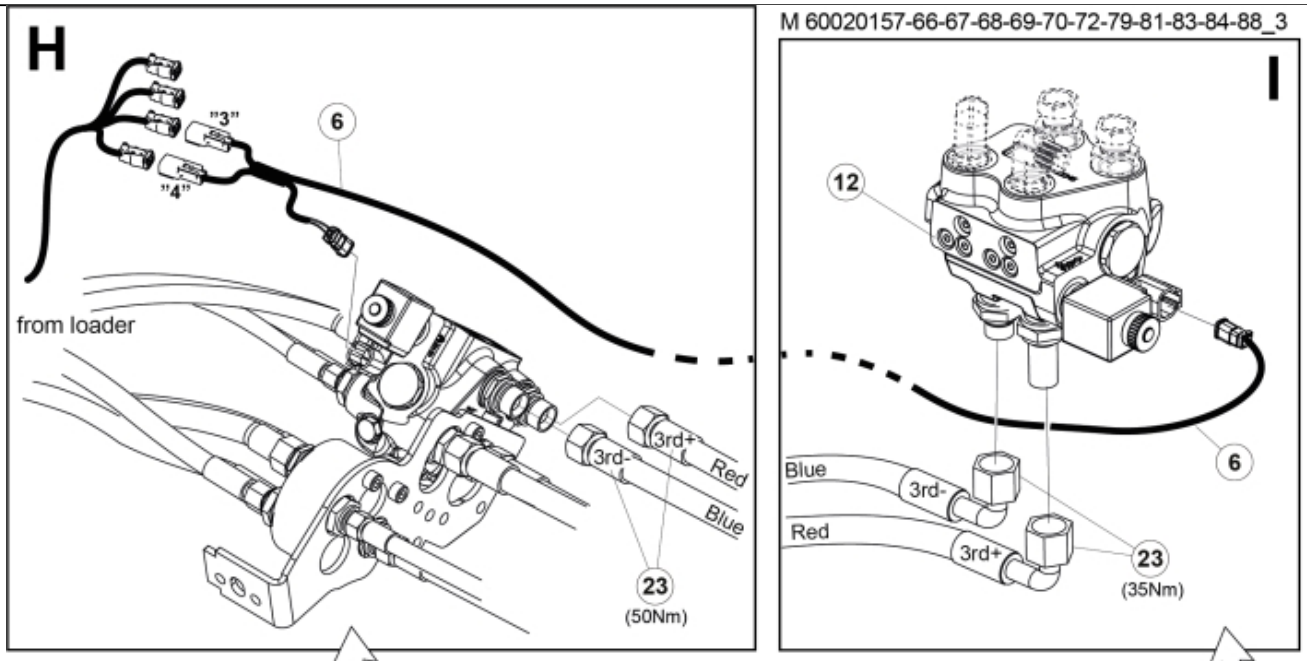

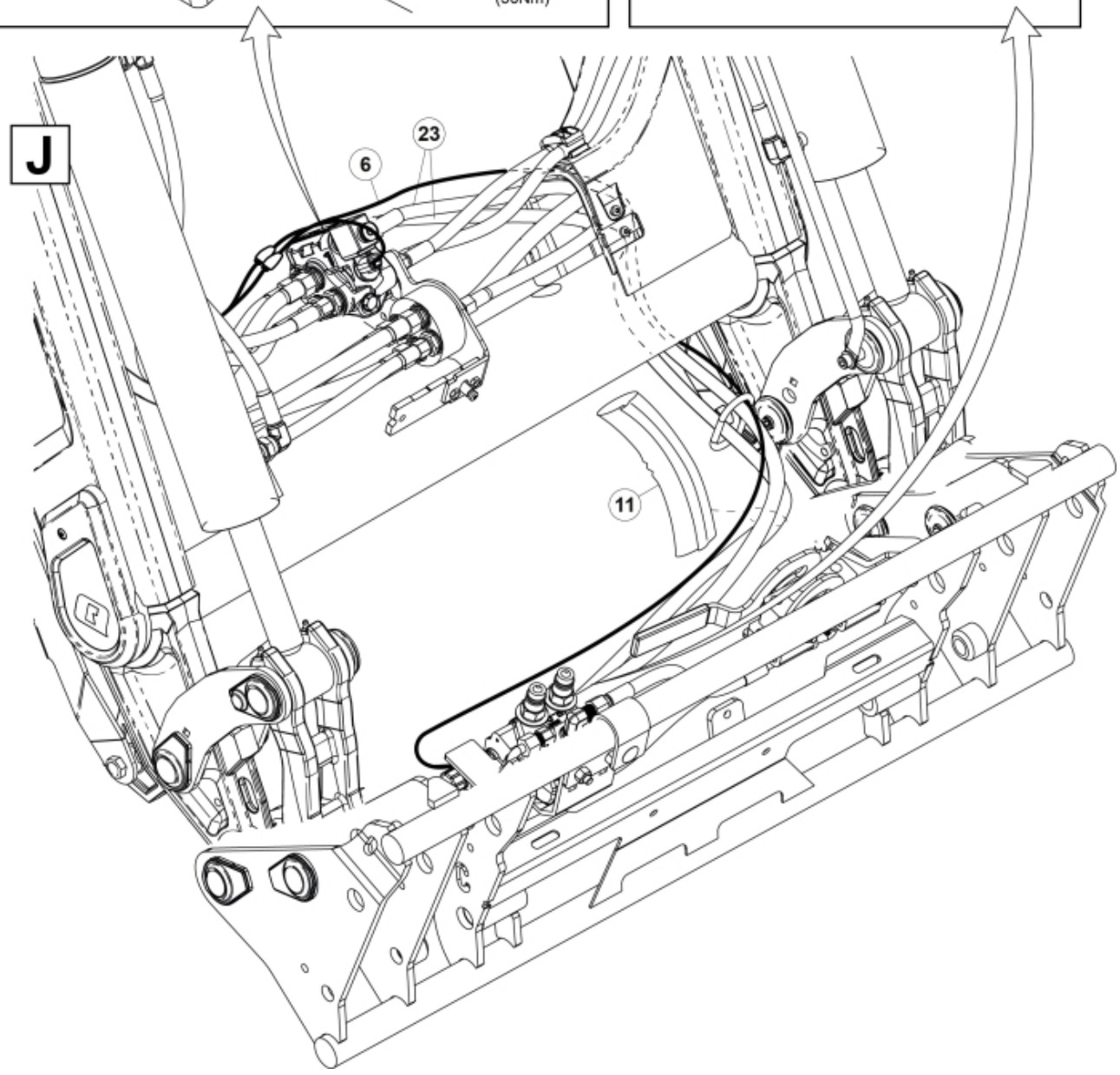

© 2025 Jost

Part assemblies 4th service, SelectoFix BigBM

PartNo	Pos	Qty	Name	Specifications
60020170		1	4th service, SelectoFix BigBM	
5004919	2	2	Screw	MC6S M8x16
60032063	6	1	Cable	4th service. (replaces 60015907)
5006002	7	2	Screw	MVBF 10x30
5011554	8	4	Nut	Loc-King M10
60019369	11	1	Hose cover	
4501105	12	1	Block cpl	4th service, Replaces 60011052, 3/1/2019 12:00:00 AM
1120011	13	1	Adaptor	R1/2"-R3/8"
1120158	14	1	Adaptor	R 1/2” - R 3/8”
5013853	15	4	Dowty washer	Tredo 1/2", Part is included in kit 60007907 Hose cpl., 9032177 Hose cpl.
60014257	16	2	Adaptor	90º
5022157	17	1	Washer, red	
5022159	18	1	Washer, blue	
60011053	20	2	Adaptor	G1/2" - G3/8"
10550369	21	1	Selecto Fix, Lower part	
60014229	23	2	Hose	3/8" L=1275 1/2GRLMA - 3/8G90LMA
60014430	24	1	Hose	3/8" L=305 3/8GRLMA - 3/8G90LMA
60014428	25	1	Hose	3/8" L=560 3/8G90LMA - 3/8G90LMA
60013878	28	1	Bracket	
5044940	31	2	Coupling	ISO-A 1/2" Male - G3/8
5044129	32	2	Dust Cover	1/2" Male
5006003	33	2	Screw	MVBF 10x40
5220303	34	1	Bracket	

© 2025 Jost