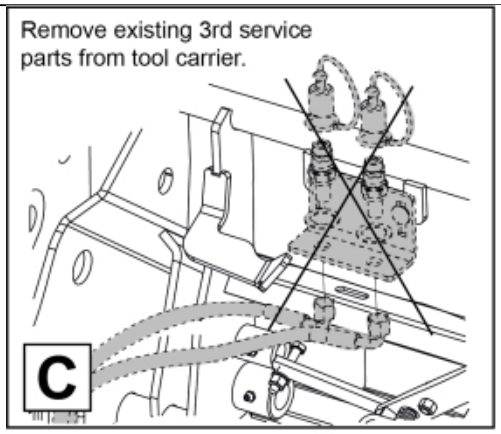

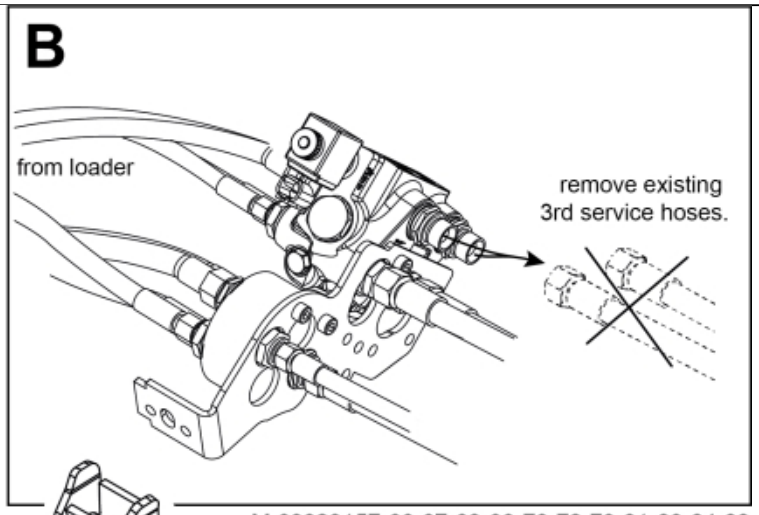

M 60020157-66-67-68-69-70-72-79-81-83-84-88

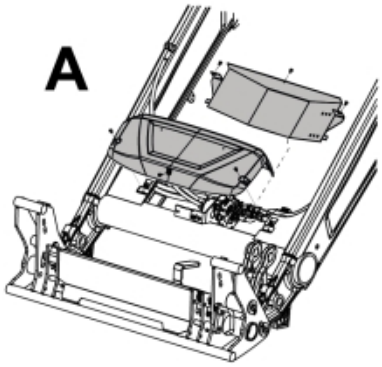

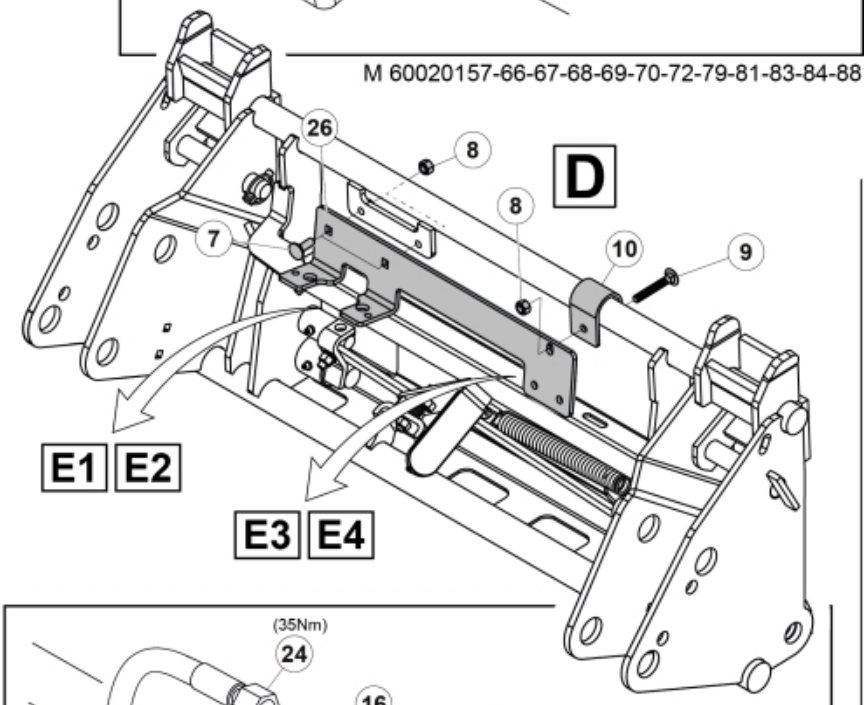

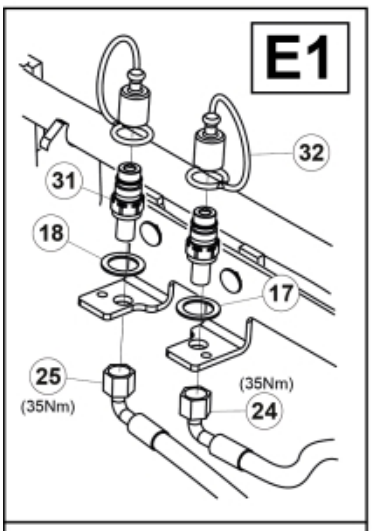

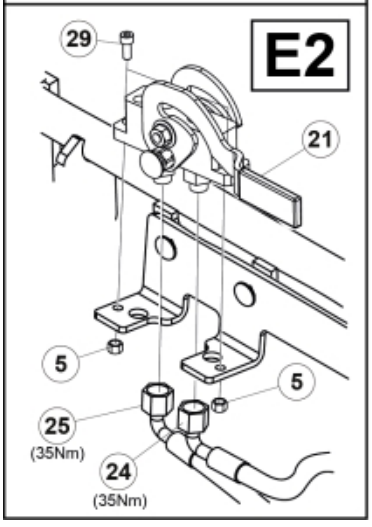

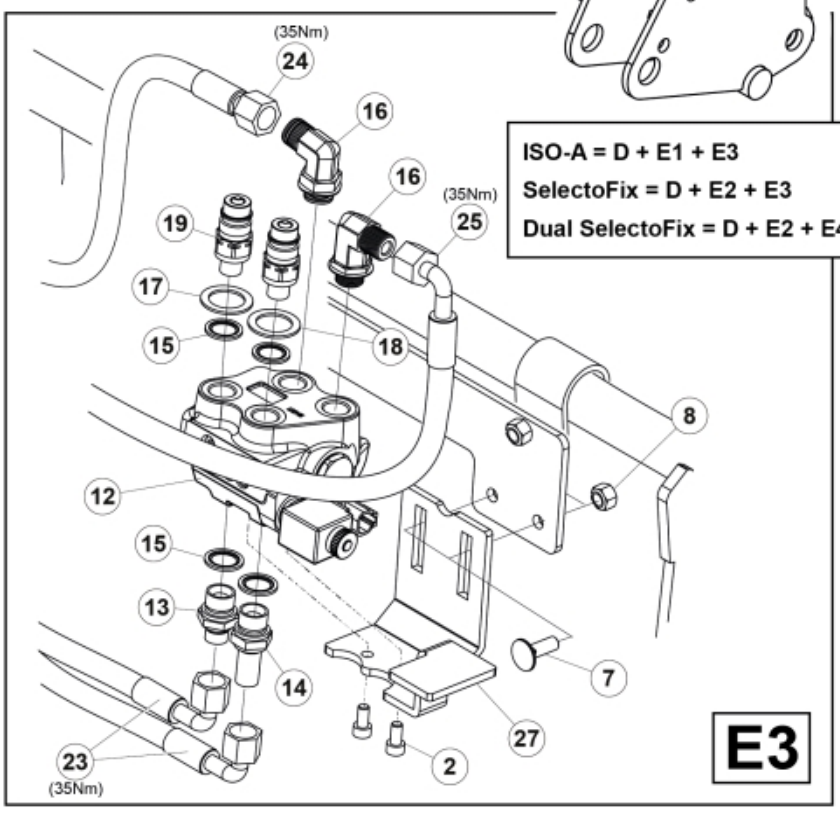

ISO-A = D + E1 + E3
SelectoFix = D + E2 + E3
Dual SelectoFix = D + E2 + E4

© 2025 Jost

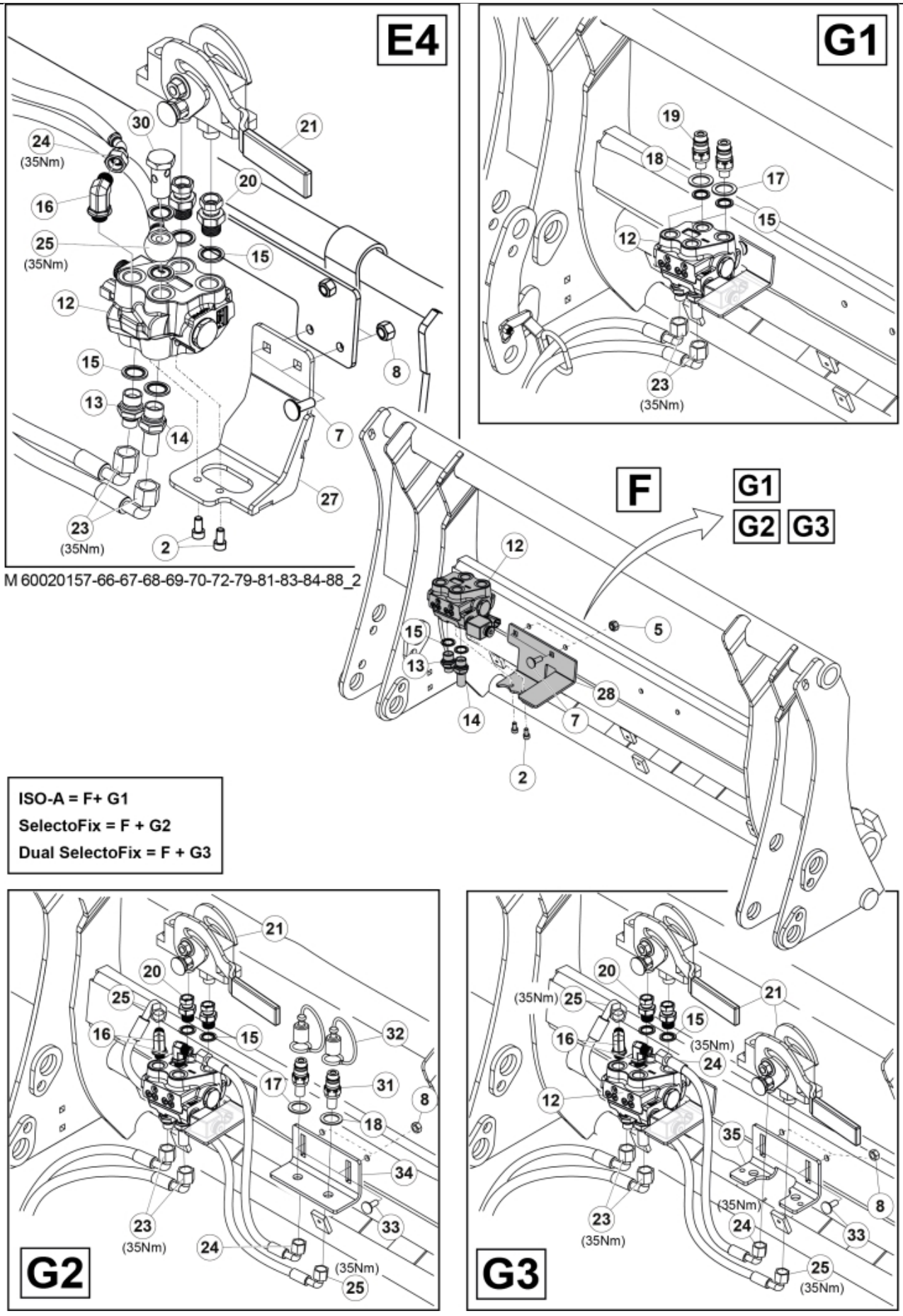

M 60020157-66-67-68-69-70-72-79-81-83-84-88_2

© 2025 Jost

M 60020157-66-67-68-69-70-72-79-81-83-84-88_3

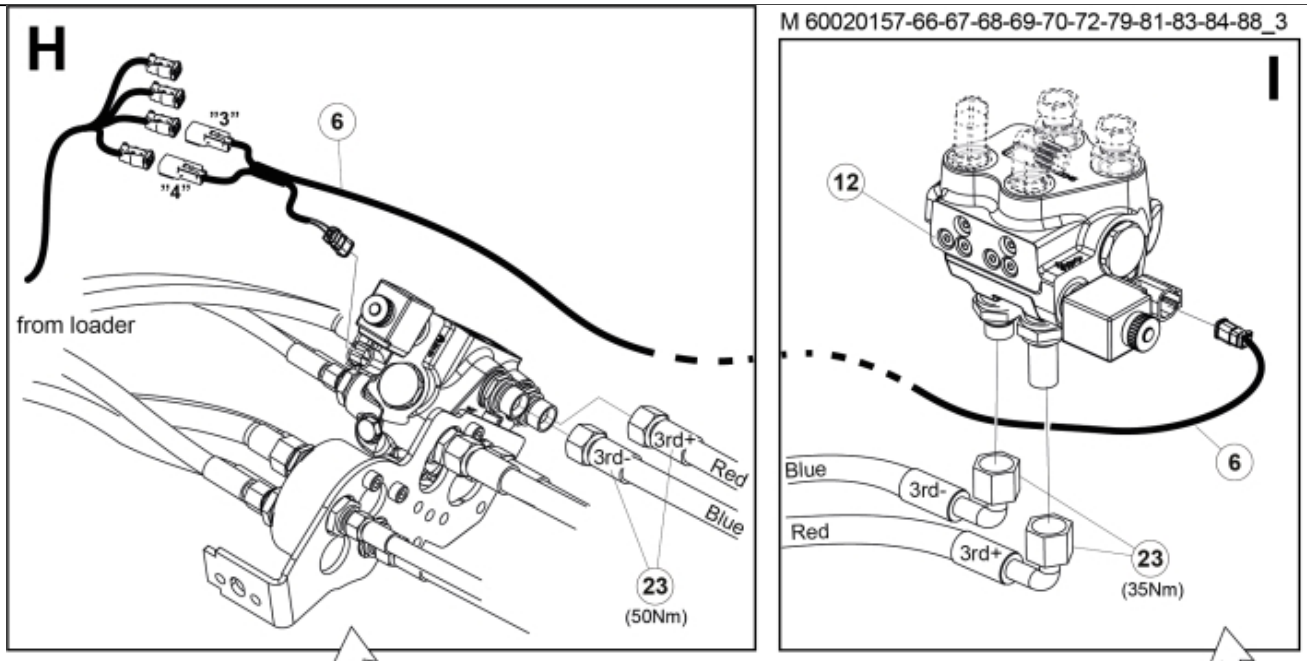

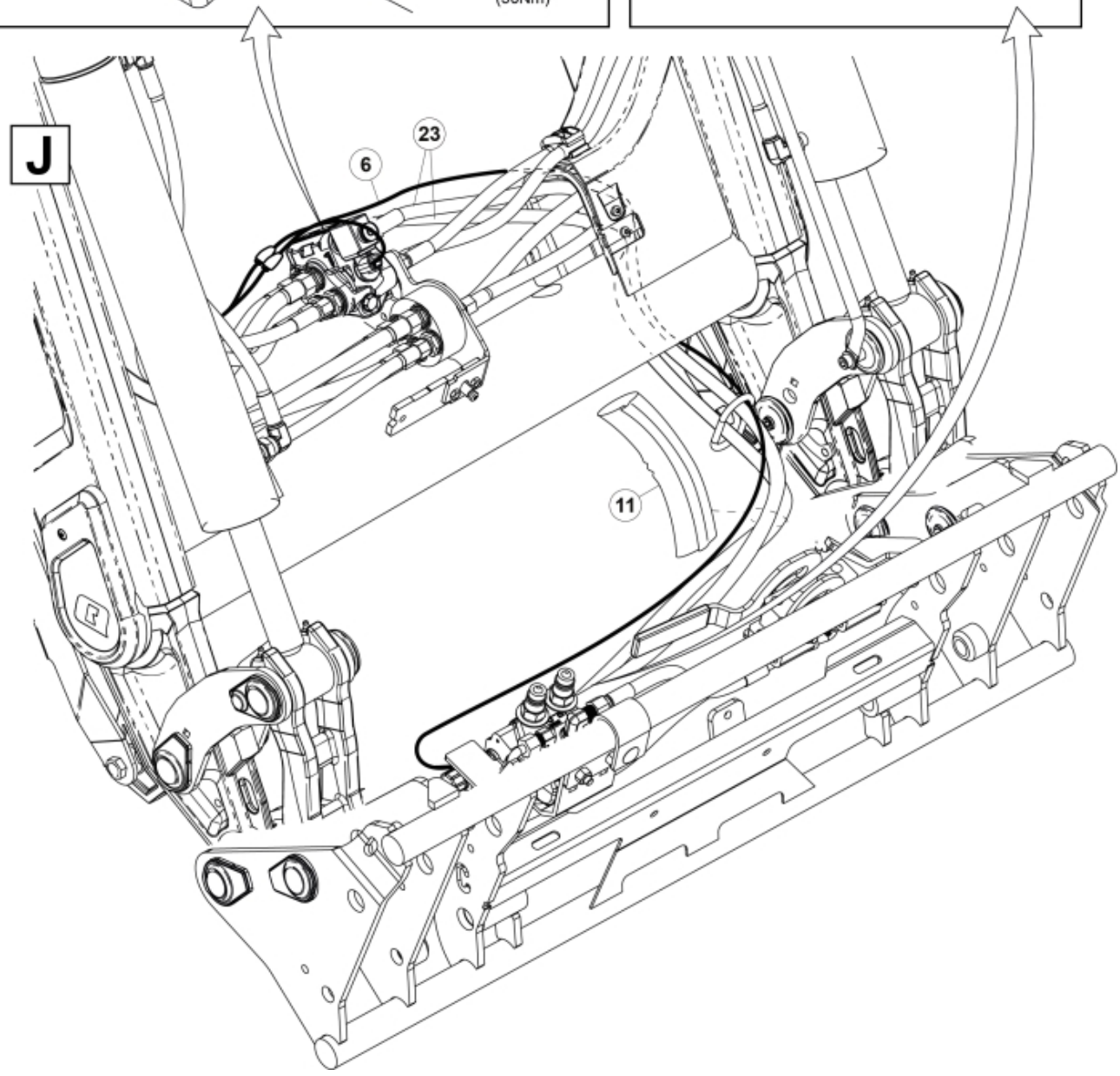

© 2025 Jost

Part assemblies 4th service, Dual SelectoFix

PartNo	Pos	Qty	Name	Specifications
60020181		1	4th service, Dual SelectoFix	
5004919	2	2	Screw	MC6S M8x16
5011553	5	2	Nut	M6M M8 Loc-king
60032063	6	1	Cable	4th service. (replaces 60015907)
5006002	7	4	Screw	MVBF 10x30
5011554	8	5	Nut	Loc-King M10
60014337	9	1	Screw	M10x70 MVBF
60014154	10	1	Bracket	
60019369	11	1	Hose cover	
4501105	12	1	Block cpl	4th service, Replaces 60011052, 3/1/2019 12:00:00 AM
1120011	13	1	Adaptor	R1/2"-R3/8"
1120158	14	1	Adaptor	R 1/2” - R 3/8”
5013853	15	6	Dowty washer	Tredo 1/2", Part is included in kit 60007907 Hose cpl., 9032177 Hose cpl.
60014257	16	1	Adaptor	90º
60011053	20	2	Adaptor	G1/2" - G3/8"
10550369	21	2	Selecto Fix, Lower part	
60014413	23	2	Hose	3/8" L=1540 1/2GRLMA - 3/8G90LMA
60021571	24	1	Hose	3/8" L=315 3/8GRLMA - 3/8G90LMC
60021569	25	1	Hose	3/8" L=425 3/8G90LM - 1/2GBanjo
60013896	26	1	Bracket	
60021160	27	1	Bracket	
5004061	29	2	Screw	MC6S M8x20
1120241	30	1	Hollow screw	

© 2025 Jost