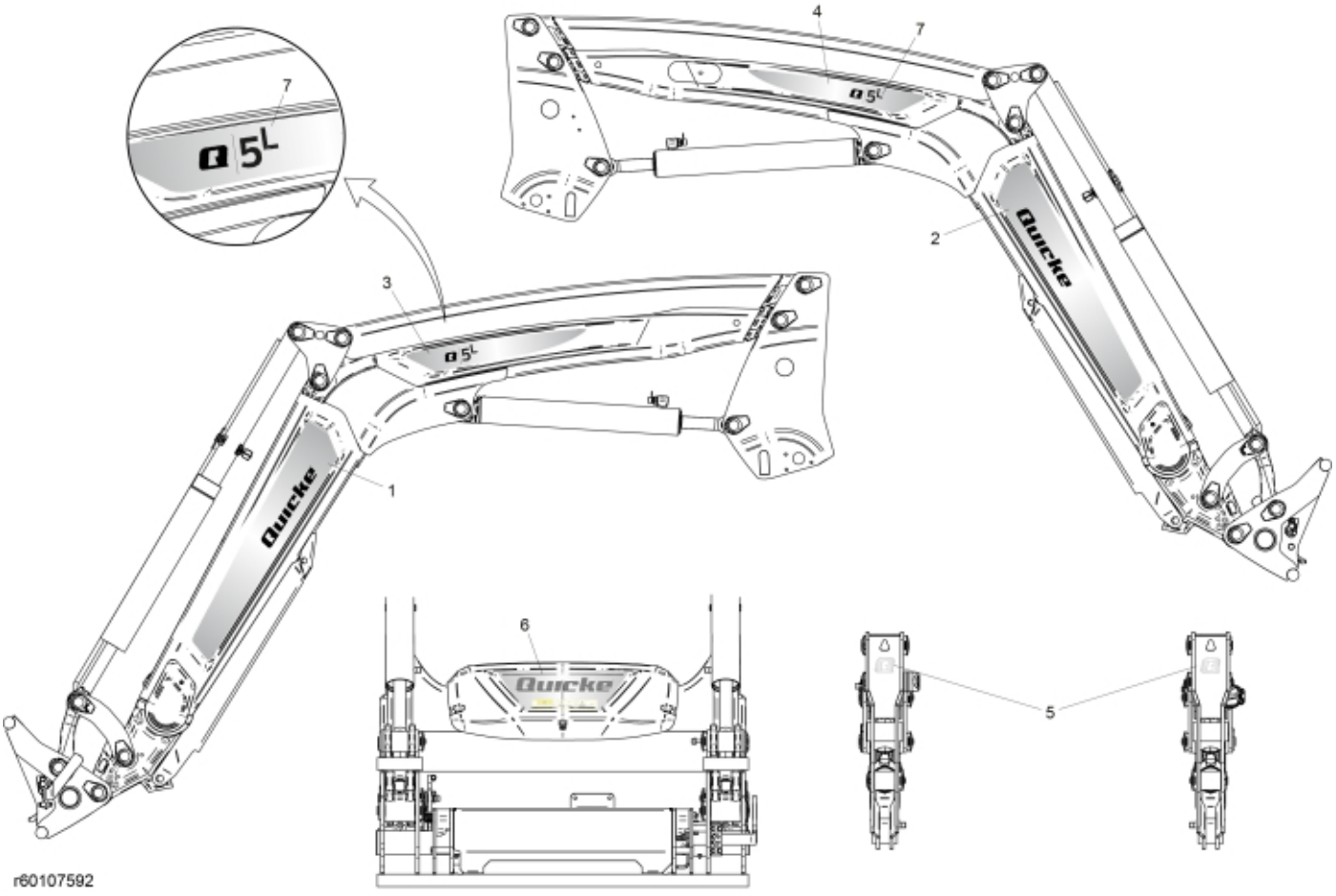

© 2025 Jost

Description	Q5L
Part assemblies	Decals

PartNo	Pos	Qty	Name	Specifications
60107856	1	1 PCS	Decal Brand, LH	Quicke
60107857	2	1 PCS	Decal Brand, RH	Quicke
60107882	3	1 PCS	Decal Model, LH	Q5
60107883	4	1 PCS	Decal Model, RH	Q5
60107906	5	2	Decal	Q
60016662	6	1 PCS	Decal, Brand	Quicke Centre Cover
60108029	7	2 PCS	Decal, Model	L

© 2025 Jost