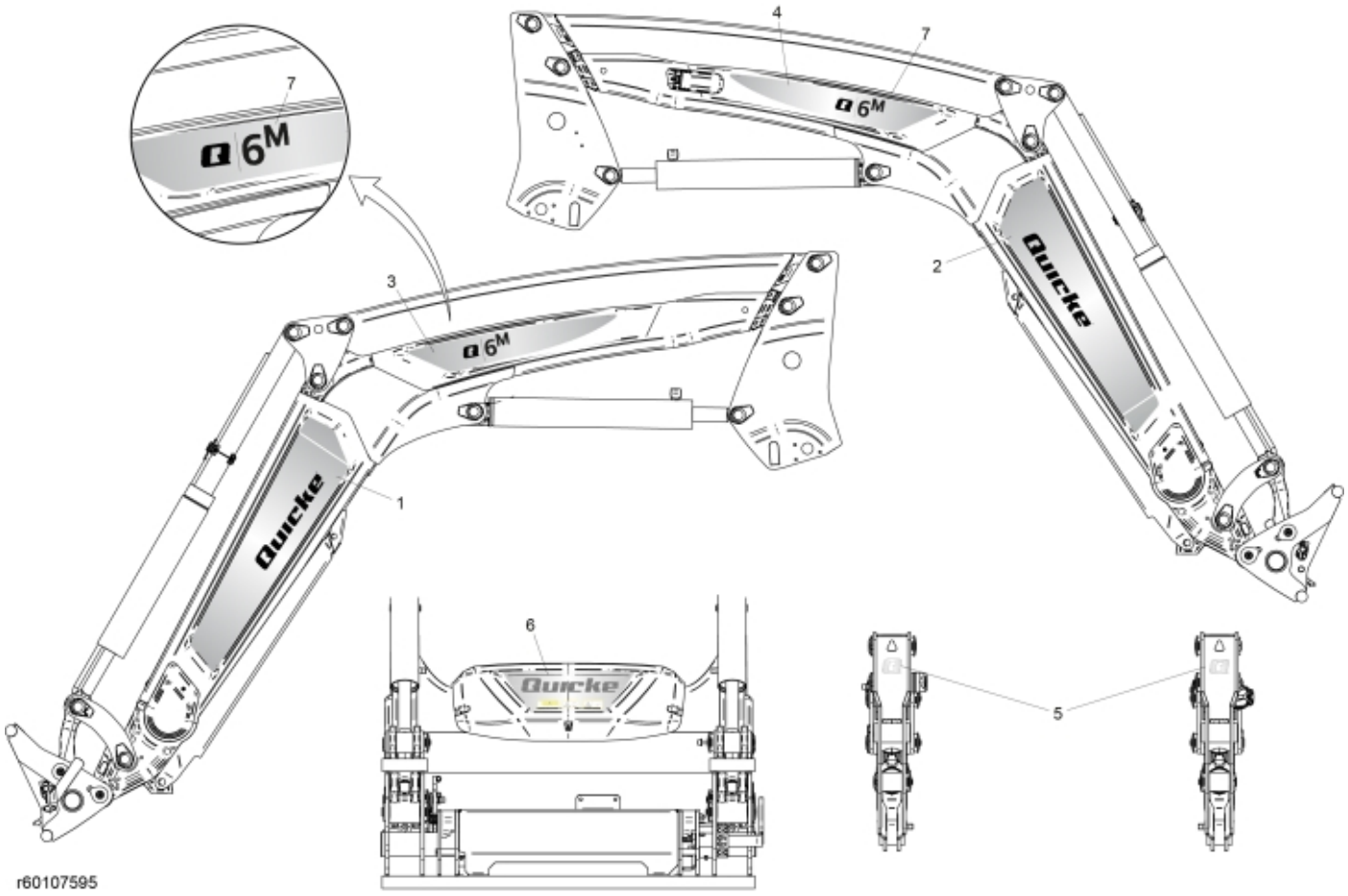

© 2025 Jost

Description	Q6M
Part assemblies	Decals

PartNo	Pos	Qty	Name	Specifications
60107858	1	1 PCS	Decal Brand, LH	Quicke
60107859	2	1 PCS	Decal Brand, RH	Quicke
60107890	3	1 PCS	Decal Model, LH	Q6
60107891	4	1 PCS	Decal Model, RH	Q6
60107906	5	2	Decal	Q
60016662	6	1 PCS	Decal, Brand	Quicke Centre Cover
60108031	7	2 PCS	Decal, Model	Large M

© 2025 Jost