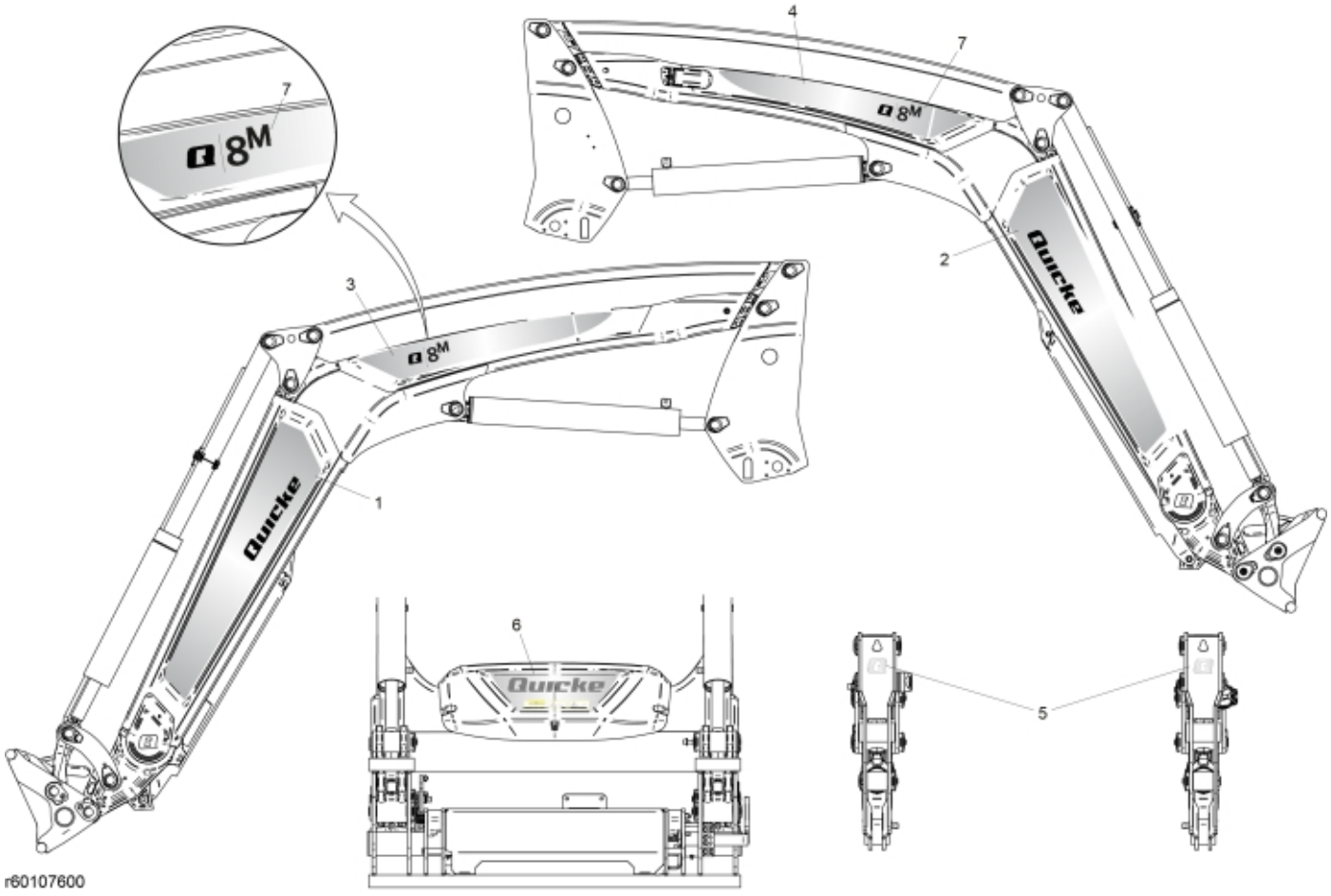

r60107600

© 2025 Jost

Description	Q8M
Part assemblies	Decals

PartNo	Pos	Qty	Name	Specifications
60107862	1	1 PCS	Decal Brand, LH	Quicke
60107863	2	1 PCS	Decal Brand, RH	Quicke
60107902	3	1 PCS	Decal Model, LH	Q8
60107903	4	1 PCS	Decal Model, RH	Q8
60107906	5	2	Decal	Q
60016662	6	1 PCS	Decal, Brand	Quicke Centre Cover
60108031	7	2 PCS	Decal, Model	Large M

© 2025 Jost