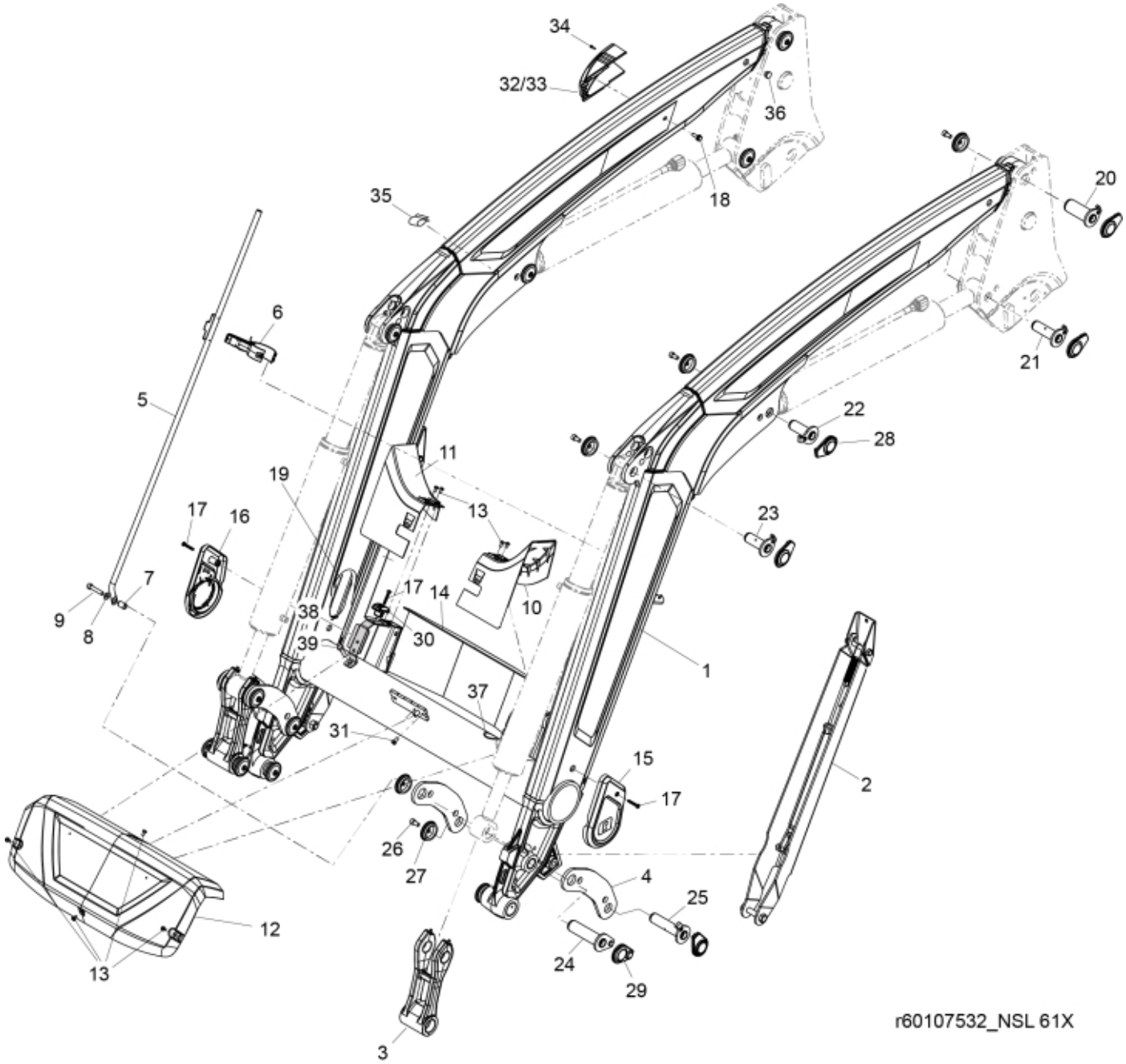
34
32/33
36
18
35
20
6
21
5
22
28
11
19
13
23
17
16
17
14
10
7
9
8
38
39
30
1
37
31
15
2
17
26
27
4
25
12
24
29
13
3
r60107532_NSL 61X

© 2025 Jost

Part assemblies	Loader beam
Specification	Specification: Black Texture

PartNo	Pos	Qty	Name	Specifications
60143346-17	1	1	Loader beam w. bushings	Black Texture
4501225-17	2	2	Support leg	Black Texture
60018638	3	2	Link w. bushings	Glossy Black
60062381-17	4	4	Link	Black Texture For loaders produced from 2021/01/28
60004102-17	4*	4	Link	Black Texture For loaders produced until 2021/01/27
5215216	5	1	Indicator rod	
5215208	6	1	Holder kit	
5215227	7	1	Spacer	
5013110	8	1	Washer	BRB 10.5x22x2
5050605	9	1	Screw	MC6S 10x50 Loc
60104343	10	1	Cover LH	DM
60104335	11	1	Cover RH	DM
60104341	12	1	Centre Cover	
5051982	13	10	Screw	M6x8
60046315-1	14	1	Protection plate	Glossy Black
60038009	15	1	Cover LH	Replaces 60107459
60038008	16	1	Cover RH	Replaces 60107458
5051983	17	4	Screw	M6x40
5006018	18	1	Screw	M6SF M8X25
60120968	19	2	Edge cover	19,5 mm for loader beam with reinforcement plates
60009870	19*	2	Edge cover	16 mm for loader beam without reinforcement plates
60107537	20	2 PCS	Pivot Pin	D=45, L=96
60018058	21	2	Pivot Pin	D=35, L=96mm
60018059	22	2	Pivot Pin	D=35, L84mm
60107536	23	2	Pivot Pin	D=35, L=80
60003248	24	2	Pivot Pin	D=40, L=127
60018053	25	2	Pivot Pin	D=35, L=127mm
5050608	26	15	Screw	MC6S M10x20 Loc
5215131	27	16	Locking cover	
60008692	28	14	Plastic cover	
60107382	29	2	Plastic cover	
60007082	30	2	Hose clamp	
5002058	31	2	Screw	M6S 8x16
60019418	32	1	Cover	Std
60019419	33	1	Cover	L3rd
5050442	34	1	• Screw	STS T40x12
60011125	35	2	Cover	
60021154	36	4	Plug	
60008713	37	1	Edge cover	
60070968	38	2	Hose guide	
5002077	39	2	Screw	M6S 10x30

© 2025 Jost