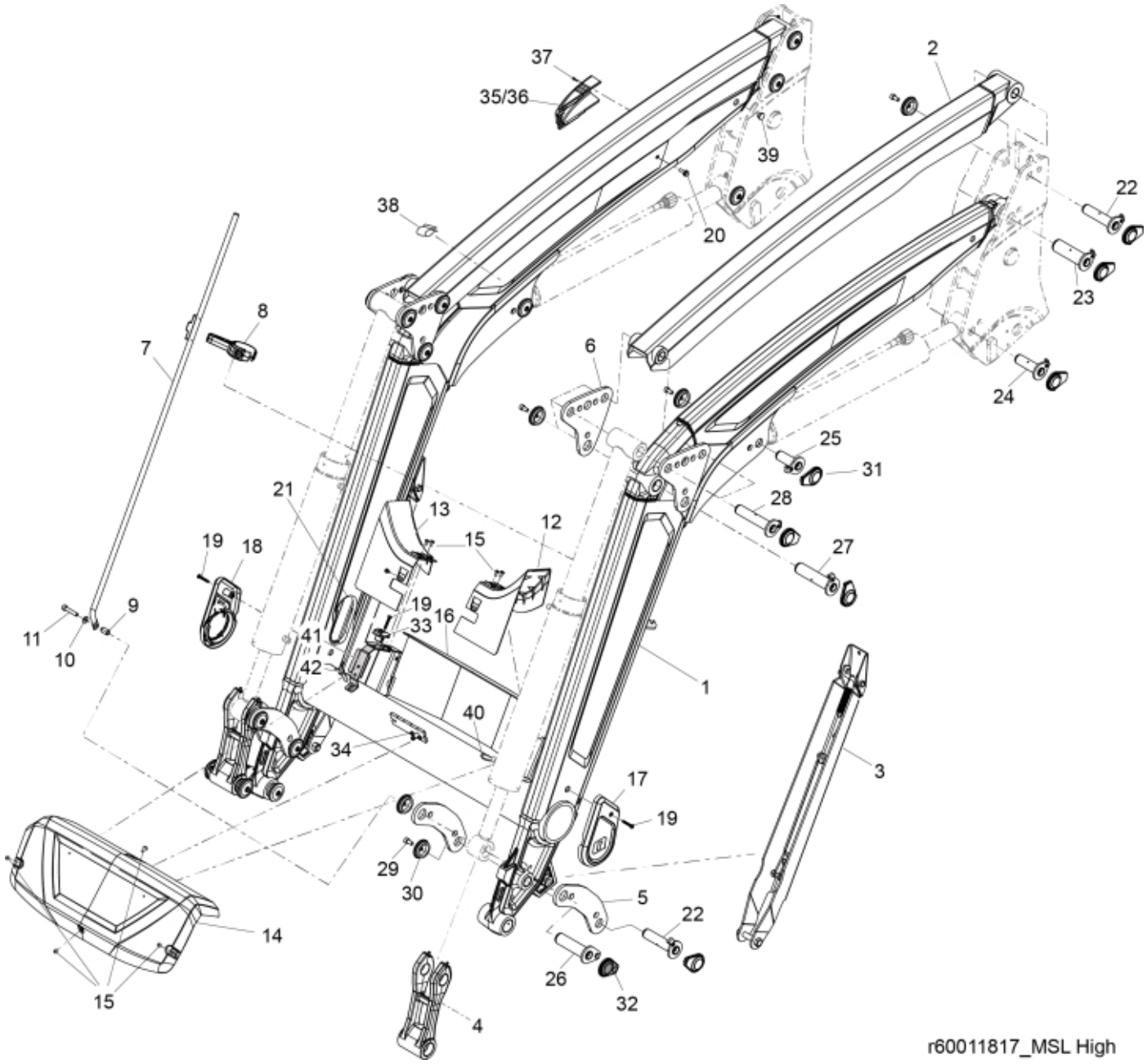
37
35/36
2
39
38
20
22
23
8
7
6
24
25
31
21
13
28
12
19
18
15
27
9
11
10
19
16
33
41
42
1
40
34
3
17
19
29
30
5
22
14
26
32
15
4
r60011817_MSL High

© 2025 Jost

Part assemblies Specification		Loader beam Specification: Black Texture		
PartNo	**Pos**	**Qty**	**Name**	**Specifications**
60143004-17	1	1	Loader beam w. bushings	Black Texture For loaders produced from 2020/10/16
60107816-17	1*	1	Loader beam w. bushings	NLA. Contact Quicke
60103804-17	2	2	Parallel rod w. bushings	Black Texture For loaders produced from 2020/10/16
60103803-17	2*	2	Parallel rod w. bushings	Black Texture For loaders produced until 2020/10/15
60045911-17	3	2 PCS	Support leg	Black Texture For loaders produced from 2020/10/16
60045910-17	3*	2	Support leg	Black Texture For loaders produced until 2020/10/15
60018637	4	2	Link w. bushings	Glossy Black
60062380-17	5	4	Link	Black Texture For loaders produced from 2021/01/13
60003914-17	5*	4	Link	Black Texture For loaders produced until 2021/01/12
60103620-17	6	4	Knee link	Black Texture
5215216	7	1	Indicator rod	
5215208	8	1	Holder kit	
5215227	9	1	Spacer	
5013110	10	1	Washer	BRB 10.5x22x2
5050605	11	1	Screw	MC6S 10x50 Loc
60104343	12	1	Cover LH	DM
60104335	13	1	Cover RH	DM
60104341	14	1	Centre Cover	
5051982	15	10	Screw	M6x8
60046315-1	16	1	Protection plate	Glossy Black
60038007	17	1	Cover LH	Replaces 60107457
60038006	18	1	Cover RH	Replaces 60107456
5051983	19	4	Screw	M6x40
5006018	20	1	Screw	M6SF M8X25
60120968	21	2	Edge cover	19,5 mm for loader beam with reinforcement plates
60009870	21*	2	Edge cover	16 mm for loader beam without reinforcement plates
60018046	22	4	Pivot Pin	D=30, L=127mm
60018062	23	2	Pivot Pin	D=40, L=127mm
60018047	24	2	Pivot Pin	D=30, L=96mm
60004177	25	2	Pivot Pin	D=30, L=80mm
60003247	26	2	Pivot Pin	D=35, L=127mm
60000355	27	2	Pivot Pin	D=35, L=147mm
60033598	28	4	Pivot Pin	D=30, L=147mm
5050608	29	21	Screw	MC6S M10x20 Loc
5215131	30	22	Locking cover	
60008692	31	20	Plastic cover	
60107382	32	2	Plastic cover	
60007082	33	2	Hose clamp	
5002058	34	2	Screw	M6S 8x16
60019418	35	1	Cover	Std
60019419	36	1	Cover	L3rd
5050442	37	1	• Screw	STS T40x12

© 2025 Jost

60011125	38	2	Cover	
60021154	39	4	Plug	
60008713	40	1	Edge cover	
60070968	41	2	Hose guide	
5002077	42	2	Screw	M6S 10x30

© 2025 Jost