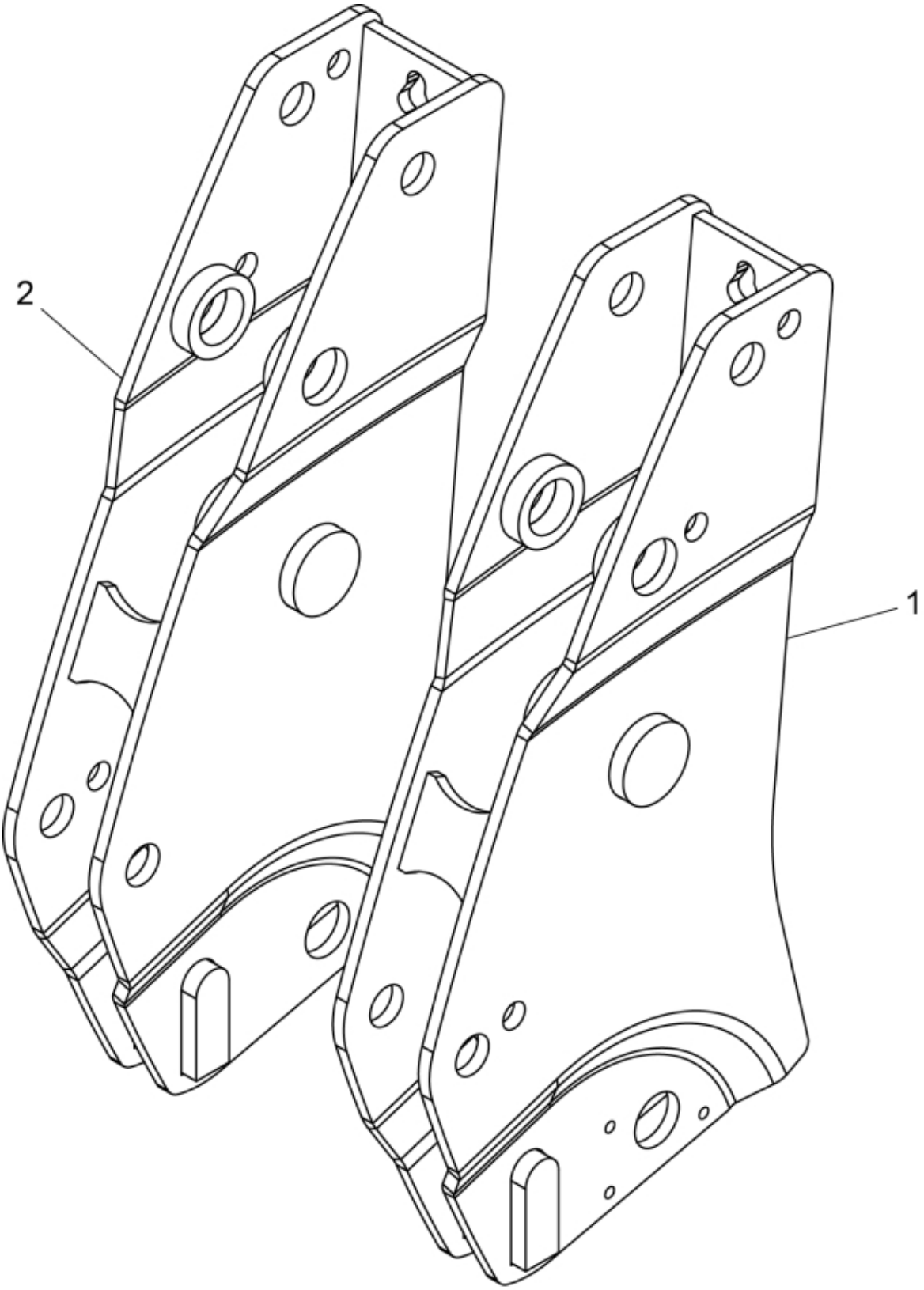

© 2025 Jost

Description	MSL
Part assemblies	Bearing box

PartNo	Pos	Qty	Name	Specifications
60004468-1	1	1 PCS	Bearing box LH	Glossy Black
60004577-1	2	1 PCS	Bearing box RH	Glossy Black

© 2025 Jost