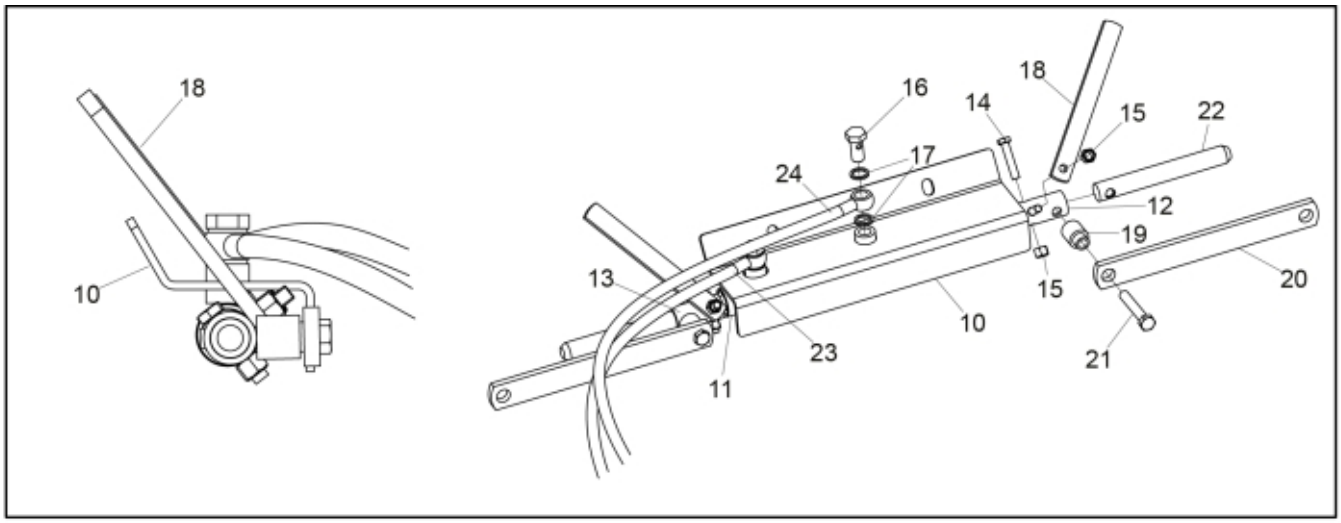

r60016313

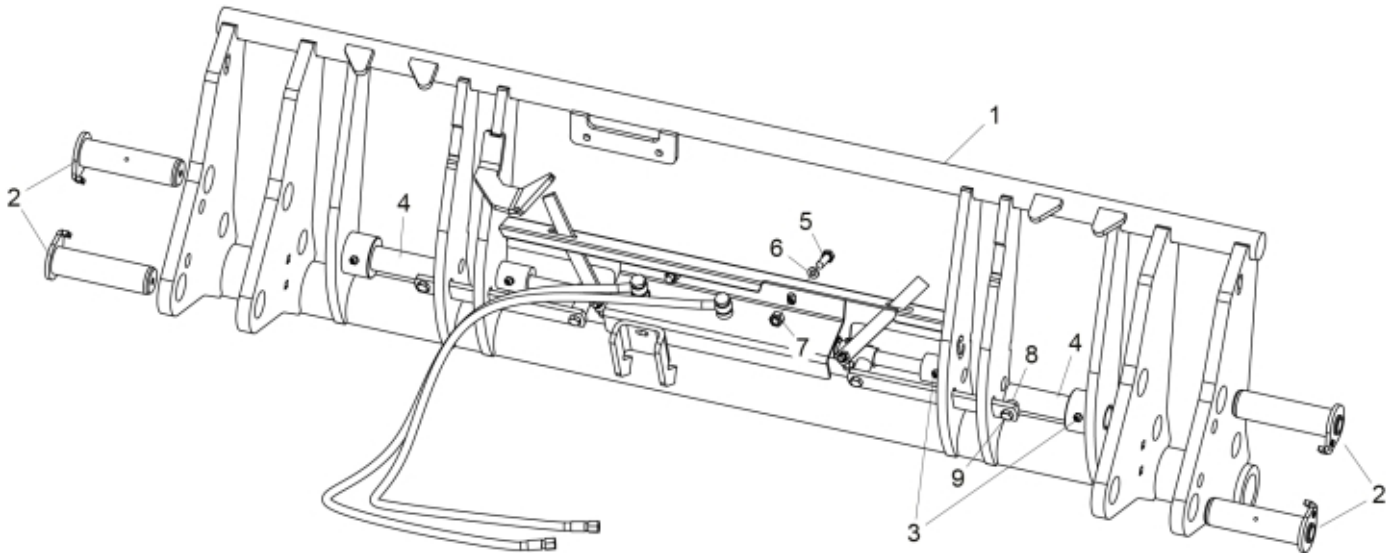

© 2025 Jost

Part assemblies Euro/Alo HD

PartNo	Pos	Qty	Name	Specifications
5220550-17	1	1	Tool carrier	Black Texture
60019828	2	4	Pivot Pin	D=40, L=147mm
5023005	3	4	Greaser	M 10 x 1
5220564	4	2 PCS	Pin	D=35mm
5002077	5	2	Screw	M6S 10x30
5013110	6	2	Washer	BRB 10.5x22x2
5011554	7	2	Nut	Loc-King M10
5219100	8	2	Spacer	
5002972	9	2	Screw	M6S 10x40 Driloc
5219048	10	1	Protection plate	
60013294	11	1	Cylinder	25/16 L=370-590
5034092	12	1 PCS	Sleeve RH	
5034093	13	1 PCS	Sleeve LH	
5002055	14	2	Screw	M6S M8x40
5011553	15	4	Nut	M6M M8 Loc-king
1120166	16	2	Banjo fitting	R1/4"
5013856	17	4	Dowty washer	Tredo 1/4"
5219049	18	2	Indicator	
5034090	19	2 PCS	Spacer	
5220566	20	2 PCS	Extension piece	
5002993	21	2 PCS	Screw	M10x60 Driloc
5219044	22	2	Pin	D=20mm
60016346	23	1 PCS	Hose	1/4" L=1550 1/4BANJO - 1/4GRLM
60016347	24	1 PCS	Hose	1/4" L=1700 1/4BANJO - 1/4GRLM

© 2025 Jost