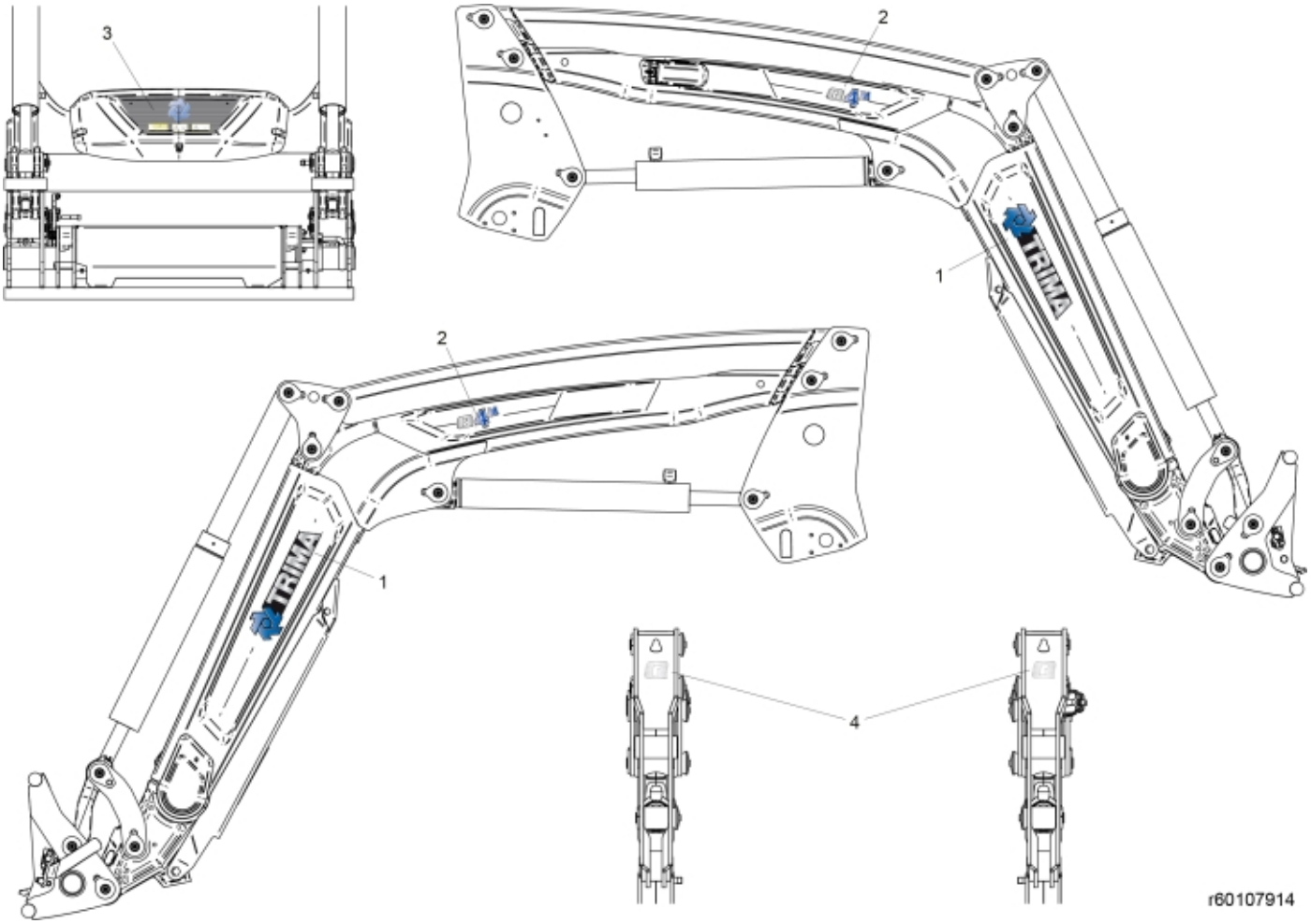

© 2025 Jost

Description	Q4M
Part assemblies	Decals

PartNo	Pos	Qty	Name	Specifications
60107907	1	2	Decal, Brand	Trima
60107936	2	2 PCS	Decal, Model	Q4M
60107928	3	1	Decal	Centre Cover Trima
60107906	4	2	Decal	Q

© 2025 Jost