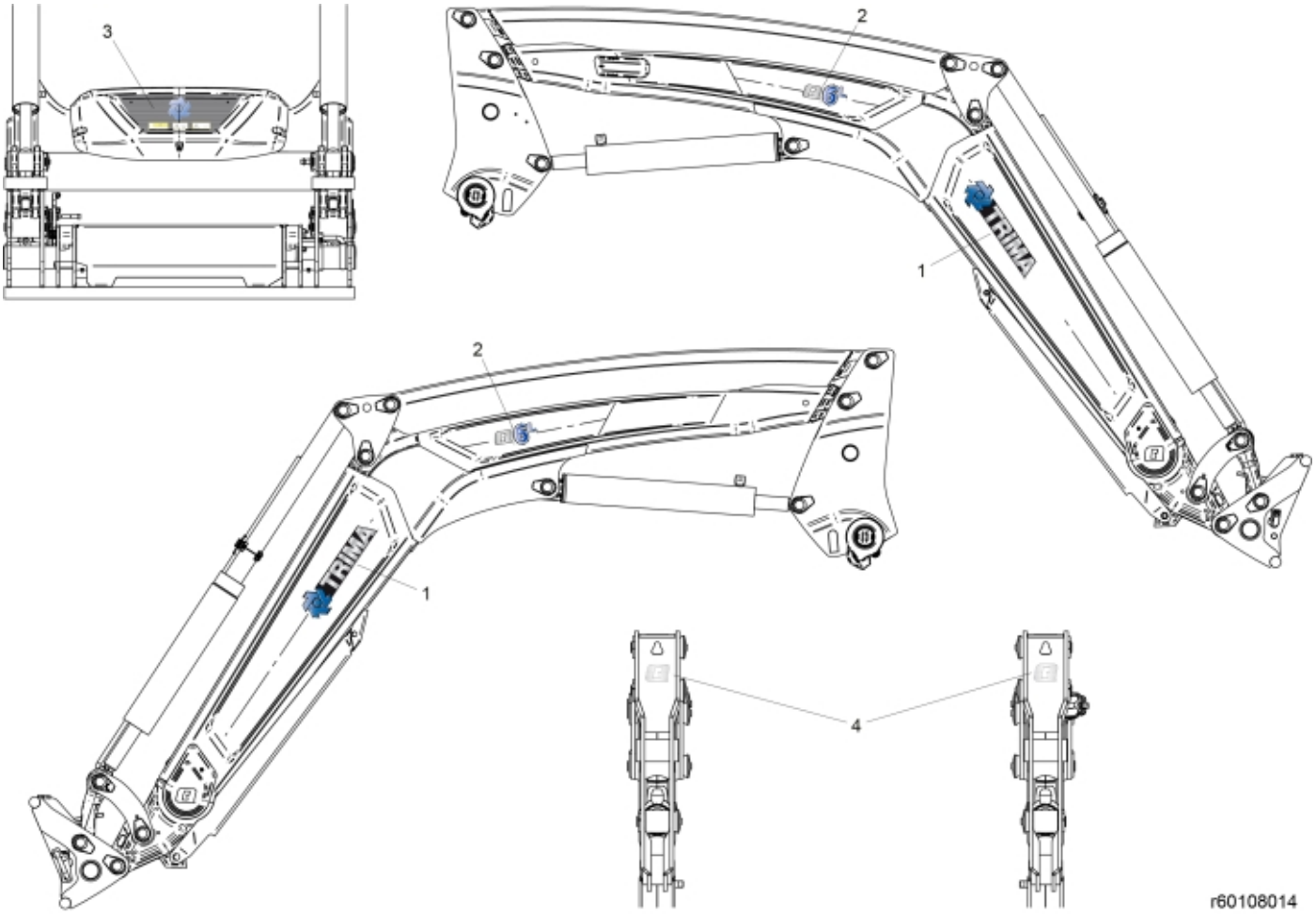

© 2025 Jost

Description	Q6L
Part assemblies	Decals

PartNo	Pos	Qty	Name	Specifications
11135054	1	2 PCS	Decal, Brand	
60107945	2	2 PCS	Decal, Model	Q6L
60107928	3	1	Decal	Centre Cover Trima
60107906	4	2	Decal	Q

© 2025 Jost