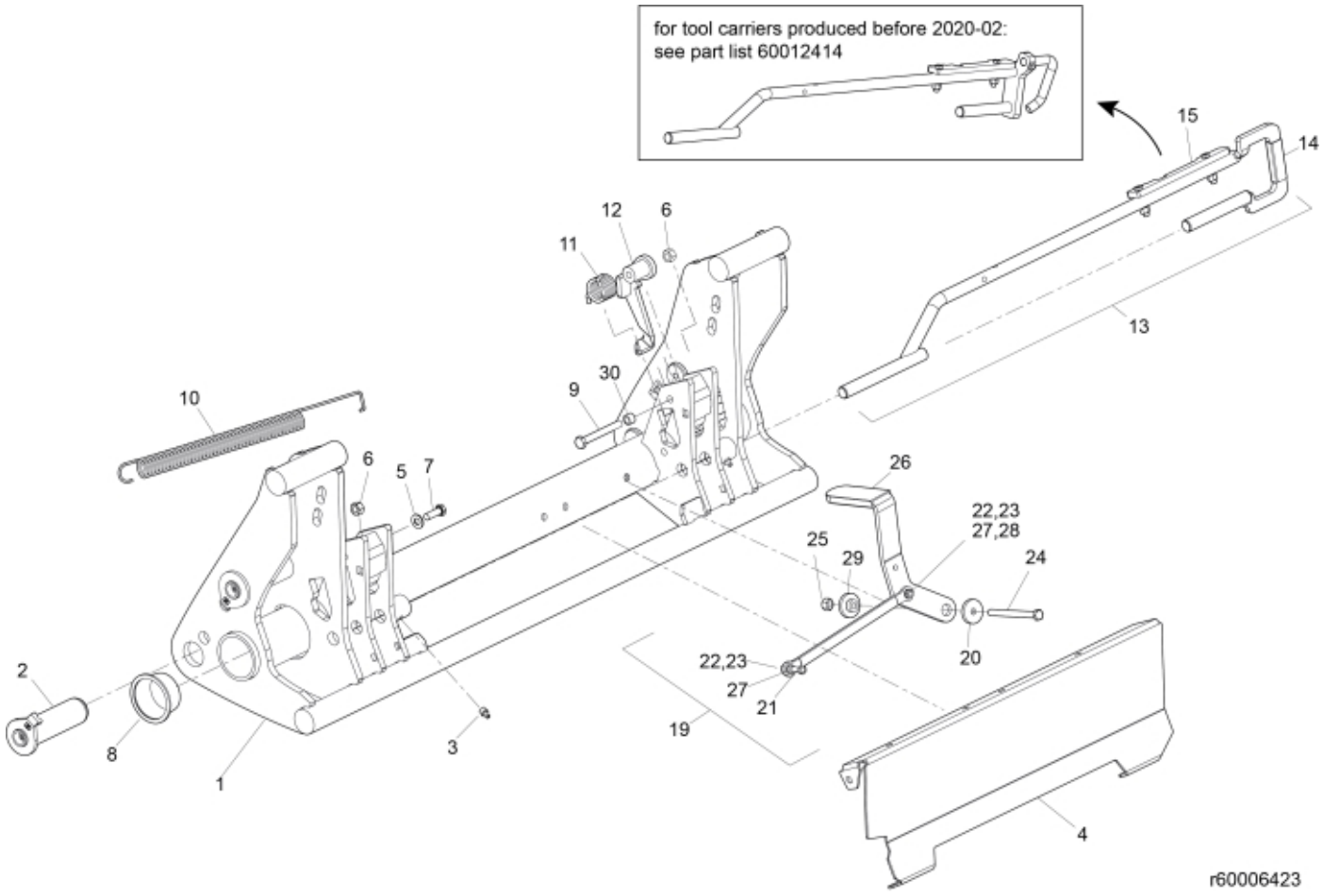
for tool carriers produced before 2020-02:
see part list 60012414
15
14
12
6
11
13
30
9
10
6
5
7
26
22,23
27,28
25
29
24
20
22,23
27
21
19
2
8
1
3
4
r60006423

© 2025 Jost

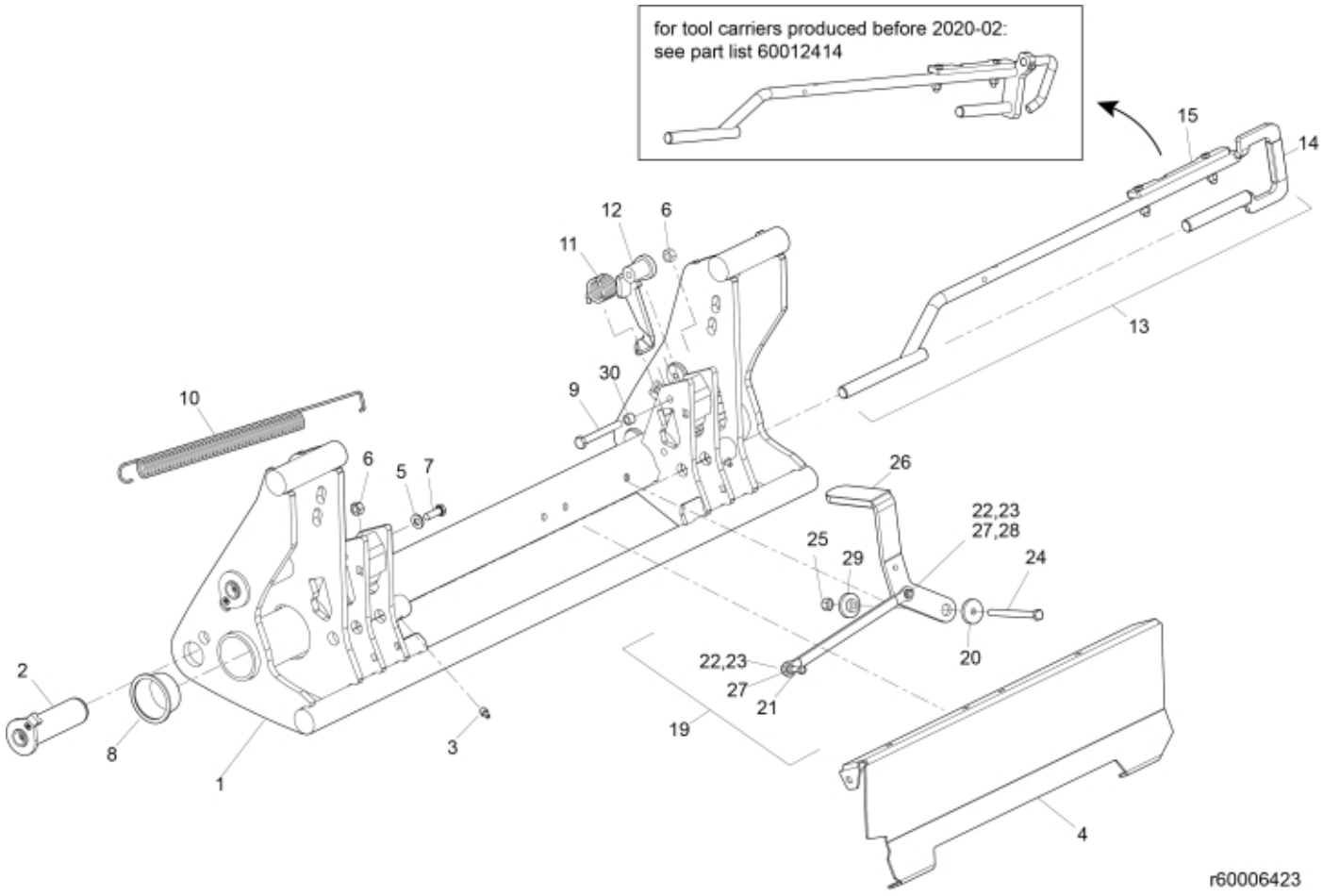
for tool carriers produced before 2020-02:
see part list 60012414
15
14
12
6
11
13
30
9
10
6
5
7
26
22,23
27,28
25
29
24
20
22,23
27
21
19
2
8
1
3
4
r60006423

© 2025 Jost

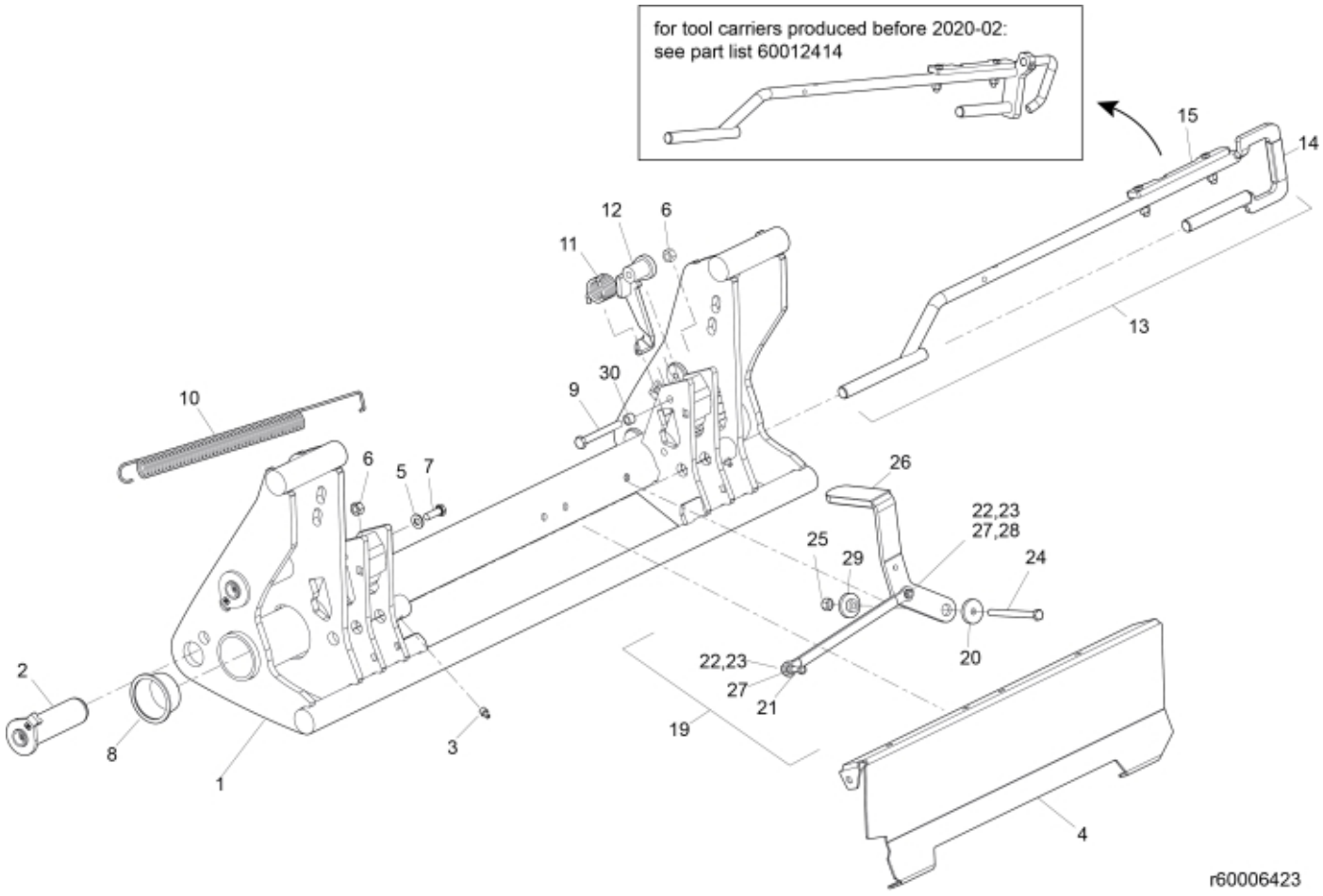
for tool carriers produced before 2020-02:
see part list 60012414
15
14
12
6
11
13
30
9
10
6
5
7
26
22,23
27,28
25
29
24
20
22,23
27
21
19
2
8
1
3
4
r60006423

© 2025 Jost

Description	Tool carrier
Part assemblies	Euro
Specification	Specification: Glossy Black

PartNo	Pos	Qty	Name	Specifications
60006423-1		1	Euro	Glossy Black
60103752-1	1	1	Tool carrier	Glossy Black
60006415	2	4	Pin	D40 L=134
5023005	3	2	Greaser	M 10 x 1
60076610-1	4	1	Cover plate	Glossy Black
5013110	5	1	Washer	BRB 10.5x22x2
5011554	6	2	Nut	Loc-King M10
5002077	7	1	Screw	M6S 10x30
5221573	8	2	Plastic cover	
5002991	9	1	Screw	M6S_M10x90 (8.8)
60010817	10	1	Spring	
5051511	11	1	Spring	
60009158	12	1	Click-on	
4501171	13	1	Locking mechanism cpl. (DM Mec)	
60039148	14	1	• Plastic handle	
60009159	15	1	• Guide plate	
60013803	19	1	Locking mechanism cpl.	
60009693	20	1	• Plate	
5002055	21	1	• Screw	M6S M8x40
5013101	22	2	• Washer	BRB 8,4 x 16
5011553	23	2	• Nut	M6M M8 Loc-king
5002091	24	1	• Screw	M6S 10x120
5011554	25	1	• Nut	Loc-King M10
5022144	26	1	• Cover	
60038758	27	2	• Spacer	
5002053	28	1	• Screw	M6S 8 x 30
60009557	29	1	• Sleeve	
5219100	30	1	Spacer	

© 2025 Jost