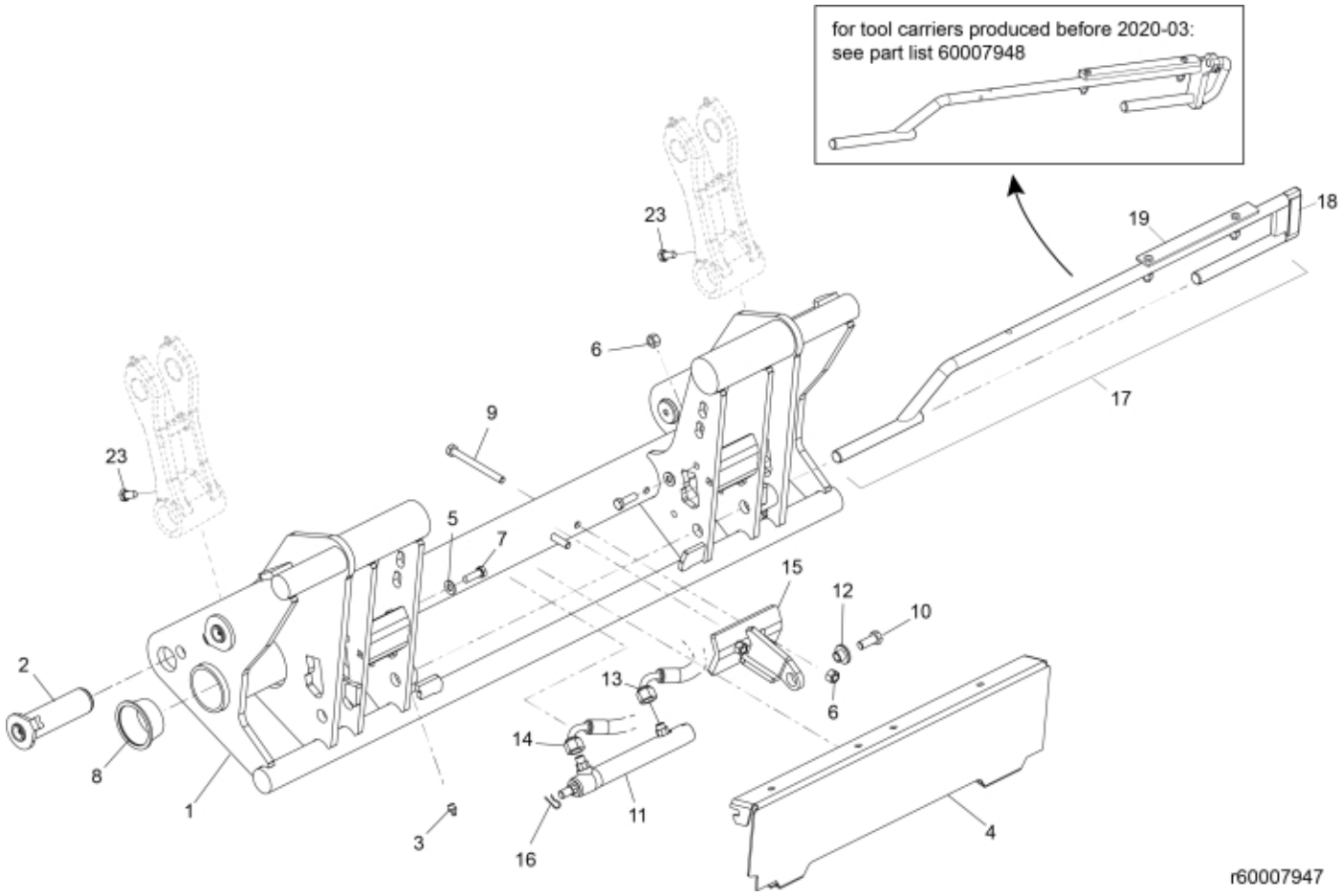
for tool carriers produced before 2020-03:
see part list 60007948
23
19
18
6
17
9
23
5
7
15
12
10
2
13
6
14
8
1
11
4
3
16
r60007947

© 2025 Jost

Description	Tool carrier
Part assemblies	Euro/SMS Hydraulic
Specification	Year To: 12/6/2020 12:00:00 AM

PartNo	Pos	Qty	Name	Specifications
60007947-1		1 PCS	Euro/SMS Hydraulic	12/6/2020 12:00:00 AM
60006482-1	1	1 PCS	Tool carrier	Glossy Black
60006415	2	4	Pin	D40 L=134
5023005	3	2	Greaser	M 10 x 1
60006671-1	4	1 PCS	Cover plate	Glossy Black
5013110	5	2	Washer	BRB 10.5x22x2
5011554	6	4	Nut	Loc-King M10
5002077	7	2	Screw	M6S 10x30
5221573	8	2	Plastic cover	
5002081	9	1	Screw	M6S M10 x 110 (8.8)
5002971	10	1	Screw	M6S 10x30 Drilock
60103722	11	1	Cylinder	
60006448	12	1	Sleeve	
60009522	13	1	Hose	1/4" L=1280 1/4G90LM - 1/4GRLM
60009523	14	1	Hose	1/4" L=1430 1/4G90LM - 1/4GRLM
60012213	15	1	Attachment	
60020459	16	2	Locking Pin	
4501176	17	1	Locking mechanism cpl. (DM Hyd)	Euro/SMS, Replaces 60012441 and 4501167
60039148	18	1	• Plastic handle	
60048147	19	1	• Guide plate	Replaces 60013414
5002172	23	2	Screw	M6S M16x20

© 2025 Jost