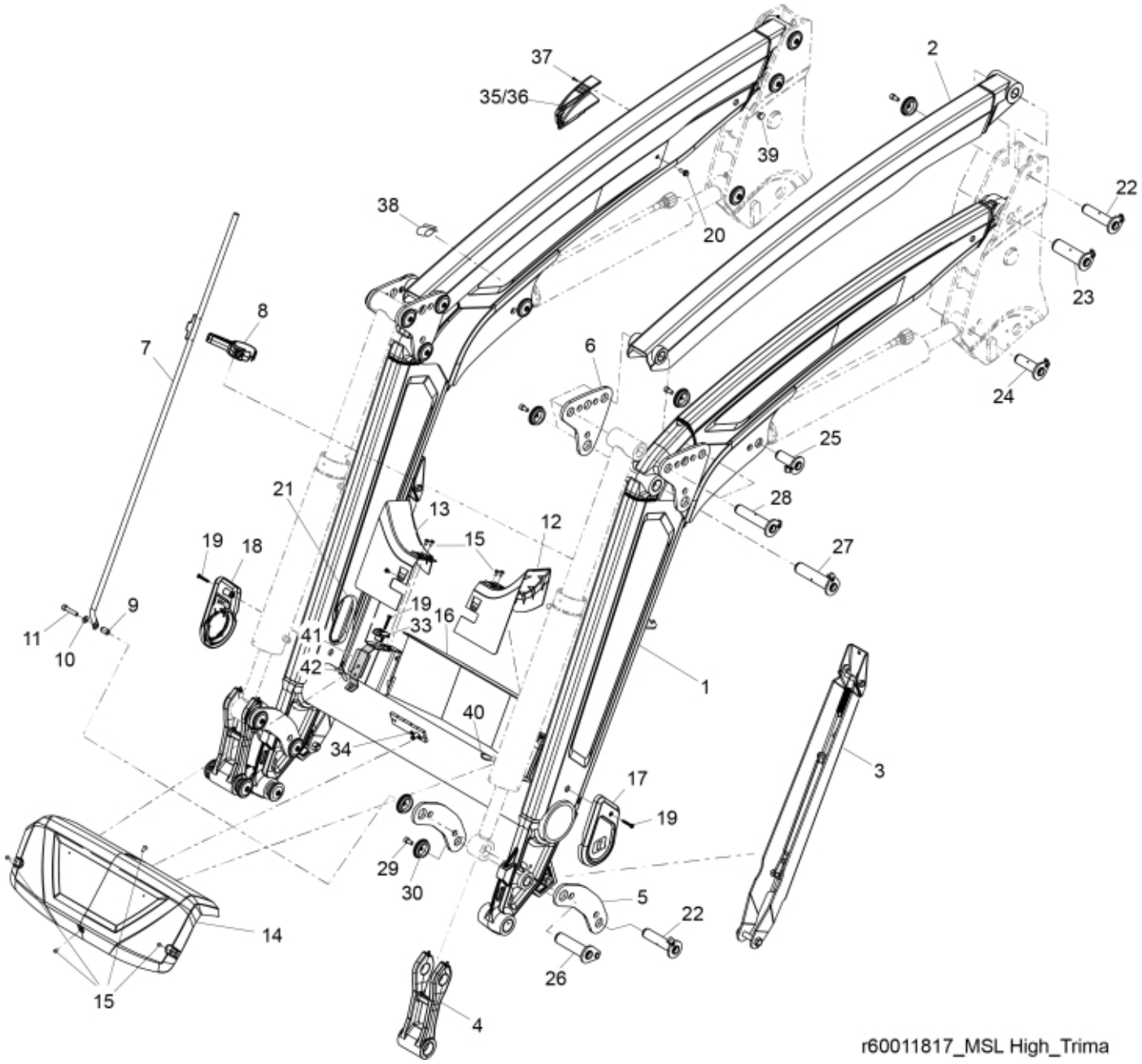
37
35/36
2
39
22
38
20
23
8
7
6
24
25
21
13
28
12
19
18
15
27
9
19
16
11
33
41
10
42
1
40
3
34
17
19
29
30
5
22
14
26
15
4
r60011817_MSL High_Trima


© 2025 Jost

**Part assemblies** Loader beam

| PartNo | Pos | Qty | Name | Specifications |
|---|---|---|---|---|
| 60143003-1 | 1 | 1 | Loader beam w. bushings | Glossy Black |
| 60103803-1 | 2 | 2 | Parallel rod w. bushings | Glossy Black |
| 60045910-1 | 3 | 2 PCS | Support leg | Glossy Black. Replaces 60105482-1 |
| 60018637 | 4 | 2 | Link w. bushings | Glossy Black |
| 60062380-1 | 5 | 4 | Link | Glossy Black For loaders produced from 2021/01/13 |
| 60003914-1 | 5* | 4 | Link | Glossy Black For loaders produced until 2021/01/12 |
| 60103620-1 | 6 | 4 | Knee link | Glossy Black |
| 5215216 | 7 | 1 | Indicator rod | |
| 5215208 | 8 | 1 | Holder kit | |
| 5215227 | 9 | 1 | Spacer | |
| 5013110 | 10 | 1 | Washer | BRB 10.5x22x2 |
| 5050605 | 11 | 1 | Screw | MC6S 10x50 Loc |
| 60104343 | 12 | 1 | Cover LH | DM |
| 60104335 | 13 | 1 | Cover RH | DM |
| 60104341 | 14 | 1 | Centre Cover | |
| 5051982 | 15 | 10 | Screw | M6x8 |
| 60046315-1 | 16 | 1 | Protection plate | Glossy Black |
| 60038007 | 17 | 1 | Cover LH | Replaces 60107457 |
| 60038006 | 18 | 1 | Cover RH | Replaces 60107456 |
| 5051983 | 19 | 4 | Screw | M6x40 |
| 5006018 | 20 | 1 | Screw | M6SF M8X25 |
| 60120968 | 21 | 2 | Edge cover | 19,5 mm for loader beam with reinforcement plates |
| 60009870 | 21* | 2 | Edge cover | 16 mm for loader beam without reinforcement plates |
| 60018046 | 22 | 4 | Pivot Pin | D=30, L=127mm |
| 60018062 | 23 | 2 | Pivot Pin | D=40, L=127mm |
| 60018047 | 24 | 2 | Pivot Pin | D=30, L=96mm |
| 60004177 | 25 | 2 | Pivot Pin | D=30, L=80mm |
| 60003247 | 26 | 2 | Pivot Pin | D=35, L=127mm |
| 60000355 | 27 | 2 | Pivot Pin | D=35, L=147mm |
| 60033598 | 28 | 4 | Pivot Pin | D=30, L=147mm |
| 5050608 | 29 | 21 | Screw | MC6S M10x20 Loc |
| 5215131 | 30 | 22 | Locking cover | |
| 60007082 | 33 | 2 | Hose clamp | |
| 5002058 | 34 | 2 | Screw | M6S 8x16 |
| 60019418 | 35 | 1 | Cover | Std |
| 60019419 | 36 | 1 | Cover | L3rd |
| 5050442 | 37 | 1 | • Screw | STS T40x12 |
| 60011125 | 38 | 2 | Cover | |
| 60021154 | 39 | 4 | Plug | |
| 60008713 | 40 | 1 | Edge cover | |
| 60070968 | 41 | 2 | Hose guide | |
| 5002077 | 42 | 2 | Screw | M6S 10x30 |


© 2025 Jost