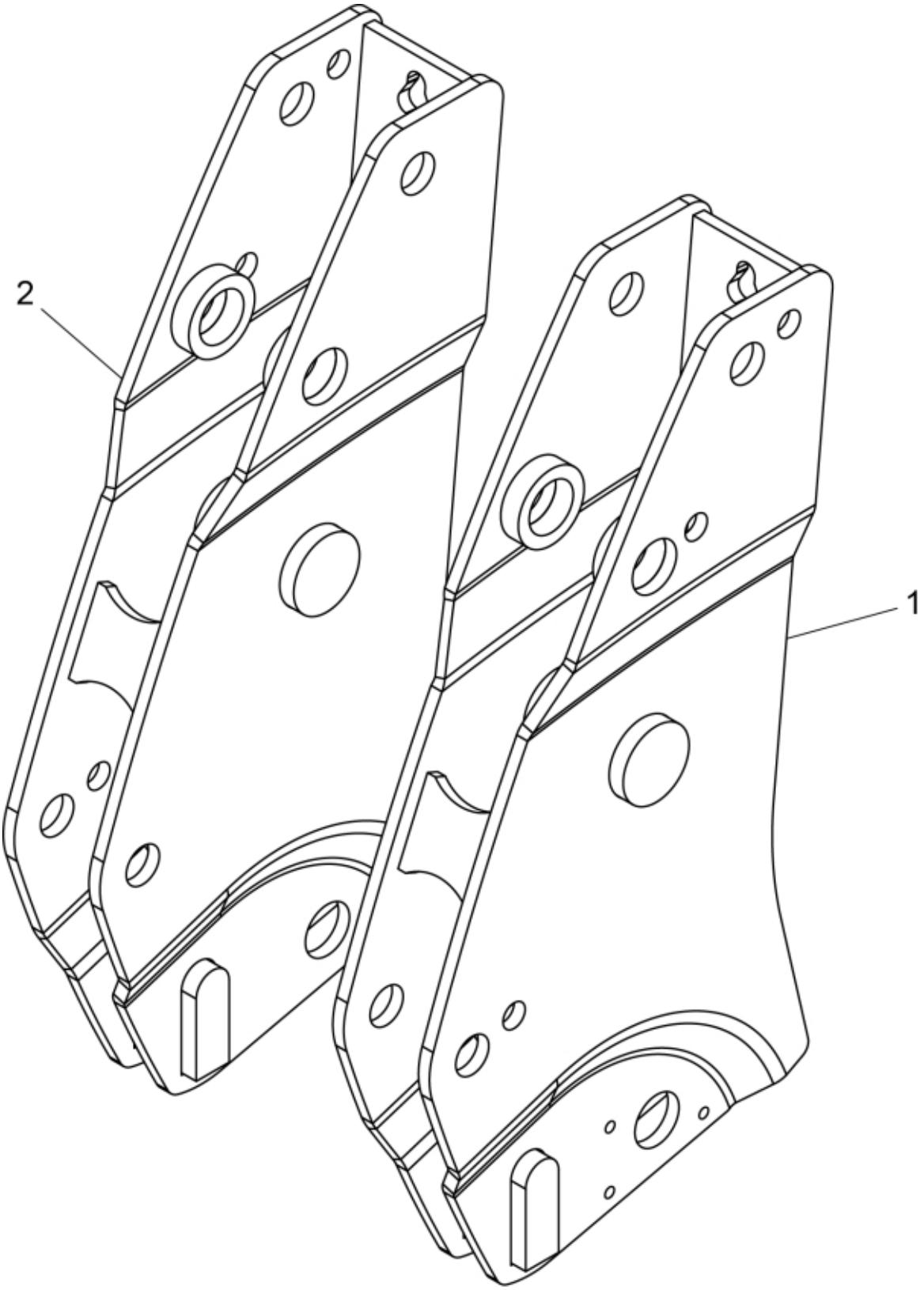

© 2025 Jost

Description	MSL
Part assemblies	Bearing box

PartNo	Pos	Qty	Name	Specifications
60103621-1	1	1	Bearing box LH	Glossy Black
60004045-1	2	1	Bearing box RH	Glossy Black

© 2025 Jost