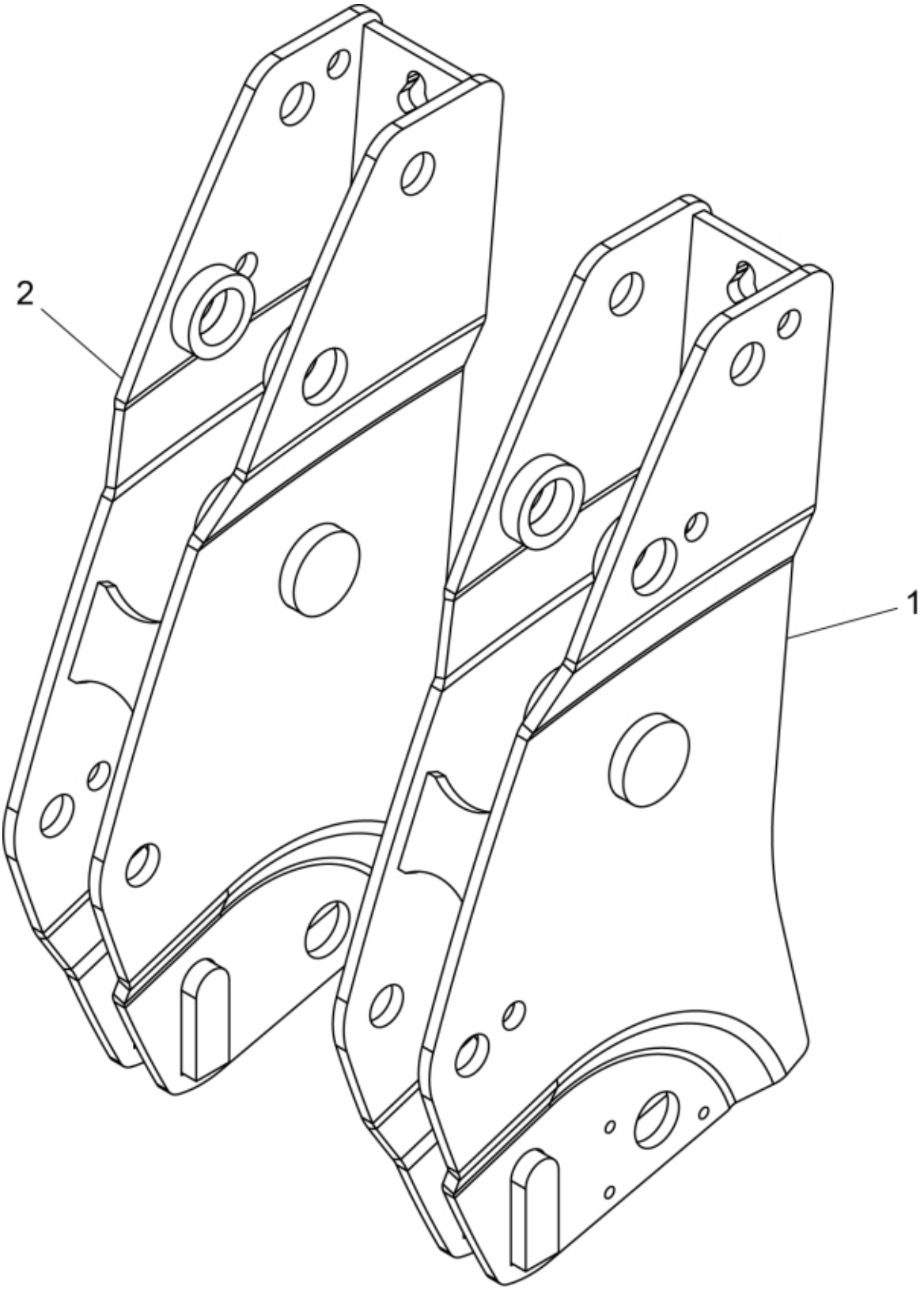

© 2025 Jost

Description	MSL
Part assemblies	Bearing box

PartNo	Pos	Qty	Name	Specifications
60005956-1	1	1 PCS	Bearing box LH	Glossy Black
60005987-1	2	1 PCS	Bearing box RH	Glossy Black

© 2025 Jost