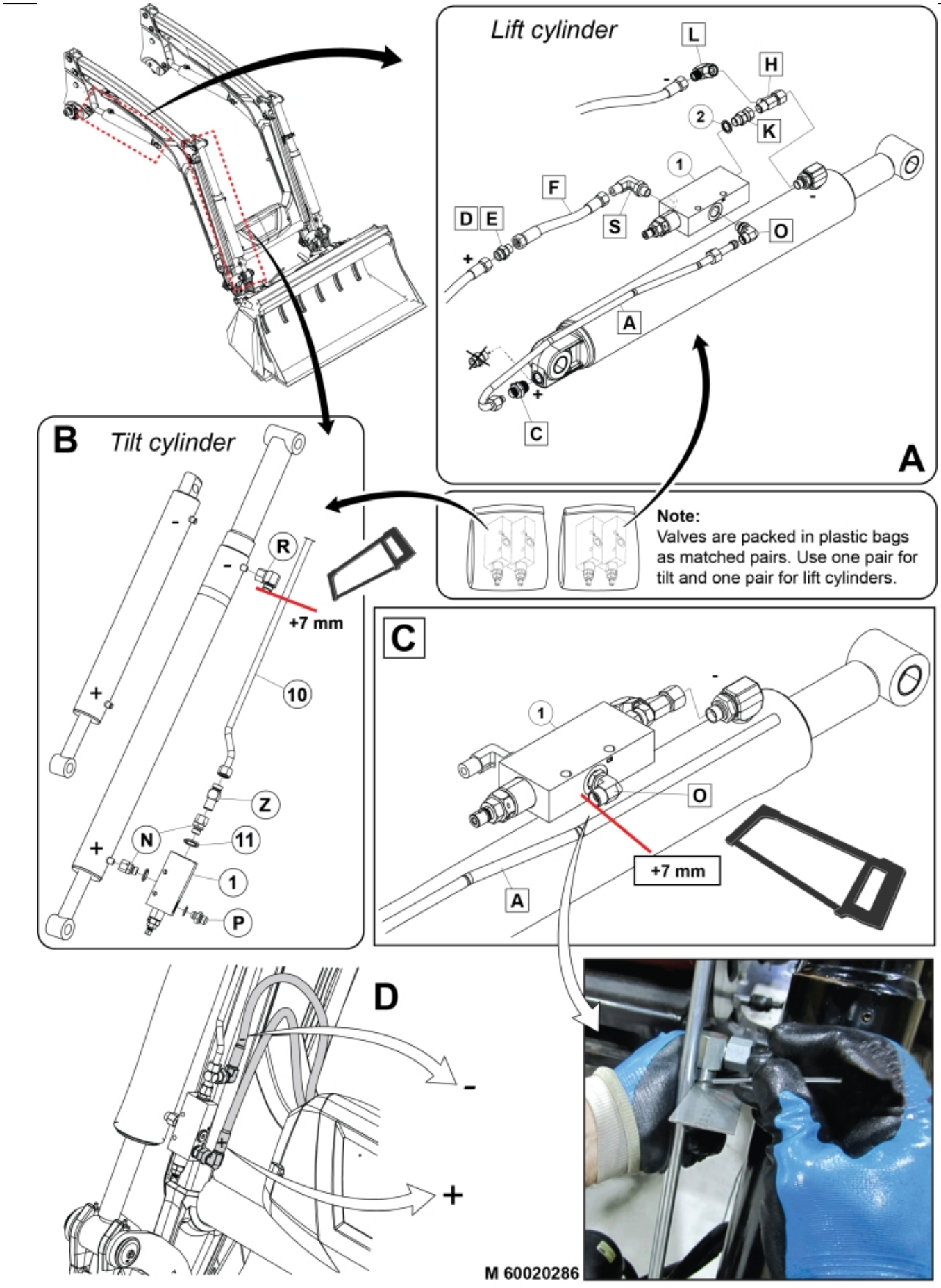
Lift cylinder
L
H
2
K
1
F
D E
S
O
A
C
A
B
Tilt cylinder
R
+7 mm
10
Z
N
11
1
P
Note:
Valves are packed in plastic bags as matched pairs. Use one pair for tilt and one pair for lift cylinders.
C
1
O
+7 mm
A
D
-
+
M 60020286

© 2025 Jost

Part assemblies Hose Burst Protection

PartNo	Pos	Qty	Name	Specifications
60020286		1	Hose Burst Protection	
10550485		1	Control valve	
10550484	1	4	• Valve	
5013852	2	2	Dowty washer	Tredo 3/8"
5028296	10	2	Pipe G	PIL to Cyl -
5013852	11	6	Dowty washer	Tredo 3/8"
60021692	A	2	Pipe A	
5050694	C	2	Adaptor	
1120010	D	2	Adaptor	
1120011	E	2	Adaptor	R1/2"-R3/8"
60021207	F	2	Hose	3/8" L=600 3/8GRLMA - 3/8GRLMA
5027454	H	2	L-coupling	
1120081	K	2	Adaptor	3/8" BSP
5028317	L	2	Adaptor	90° G3/8" fzb
5028297	N	4	Adaptor	G3/8 ext - G3/8 int
5028277	O	2	Adaptor	90° G3/8" int - M18x1,5 ext
1120010	P	2	Adaptor	
5028280	R	2	Adaptor	90° G3/8" int - M18x1,5 ext
5027982	S	2	Adaptor	3/8" Adjustable
5028298	Z	2	Adaptor	G3/8 - G3/8 - M18x1,5

© 2025 Jost