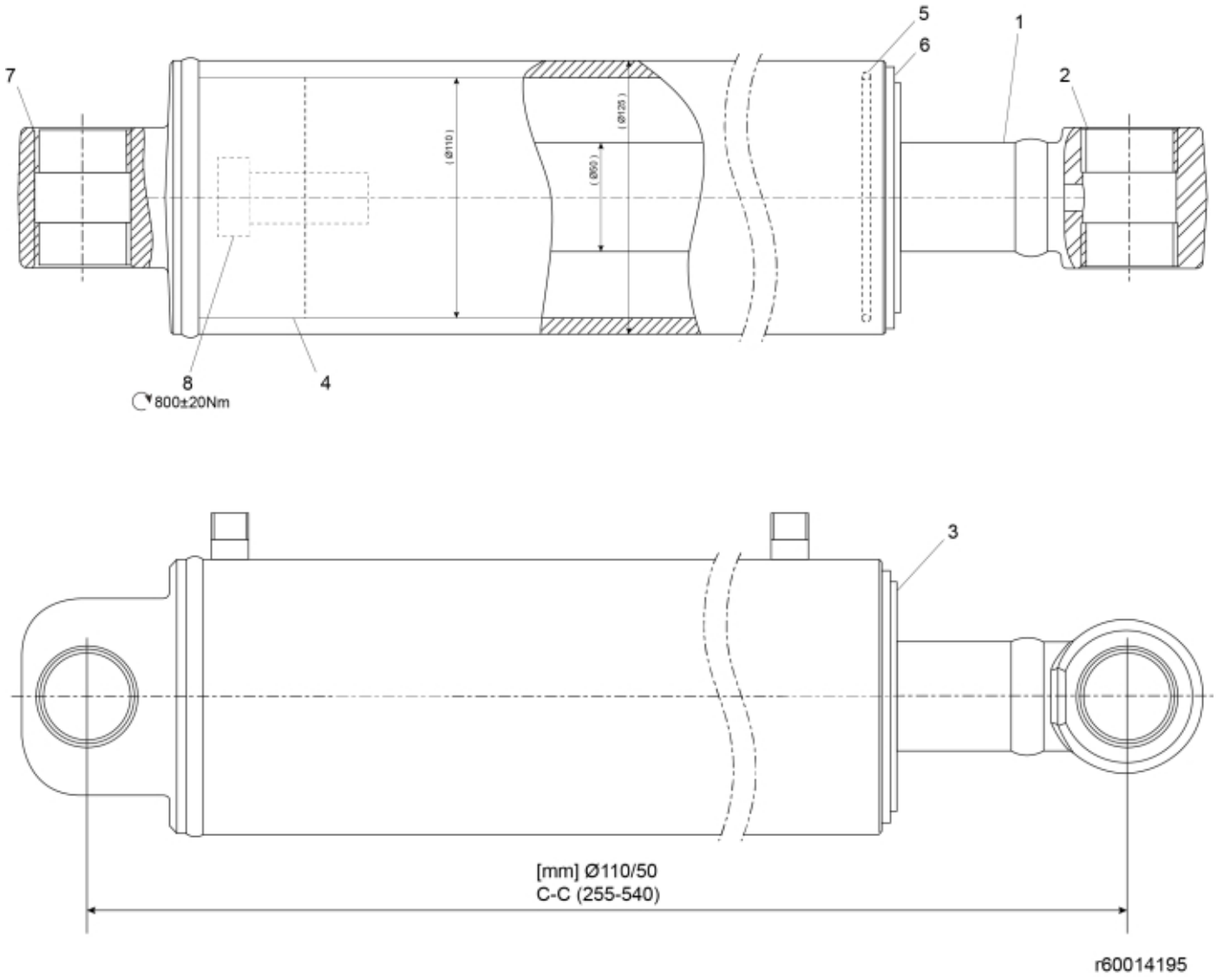
5
6
1
2
7
(Ø110)
(Ø125)
(Ø50)
8
4
800±20Nm
3
[mm] Ø110/50
C-C (255-540)
r60014195

© 2025 Jost

Description	110/50
Part assemblies	Cylinder
Specification	Specification: Glossy Black
	Year To: 2/5/2026 12:00:00 AM

PartNo	Pos	Qty	Name	Specifications
60022171	1	1	Piston rod cpl.	
5018513	2	2	• Bushing	D40 L=20
60022170	3	1 PCS	Bearing	
60022168	4	1 PCS	Piston	
60022167	5	1	Retaining ring	
60022166	6	1	Retaining ring	
5018513	7	2	Bushing	D40 L=20
60022164	8	1 PCS	Screw	
60022163	9	1	Seal kit	

© 2025 Jost