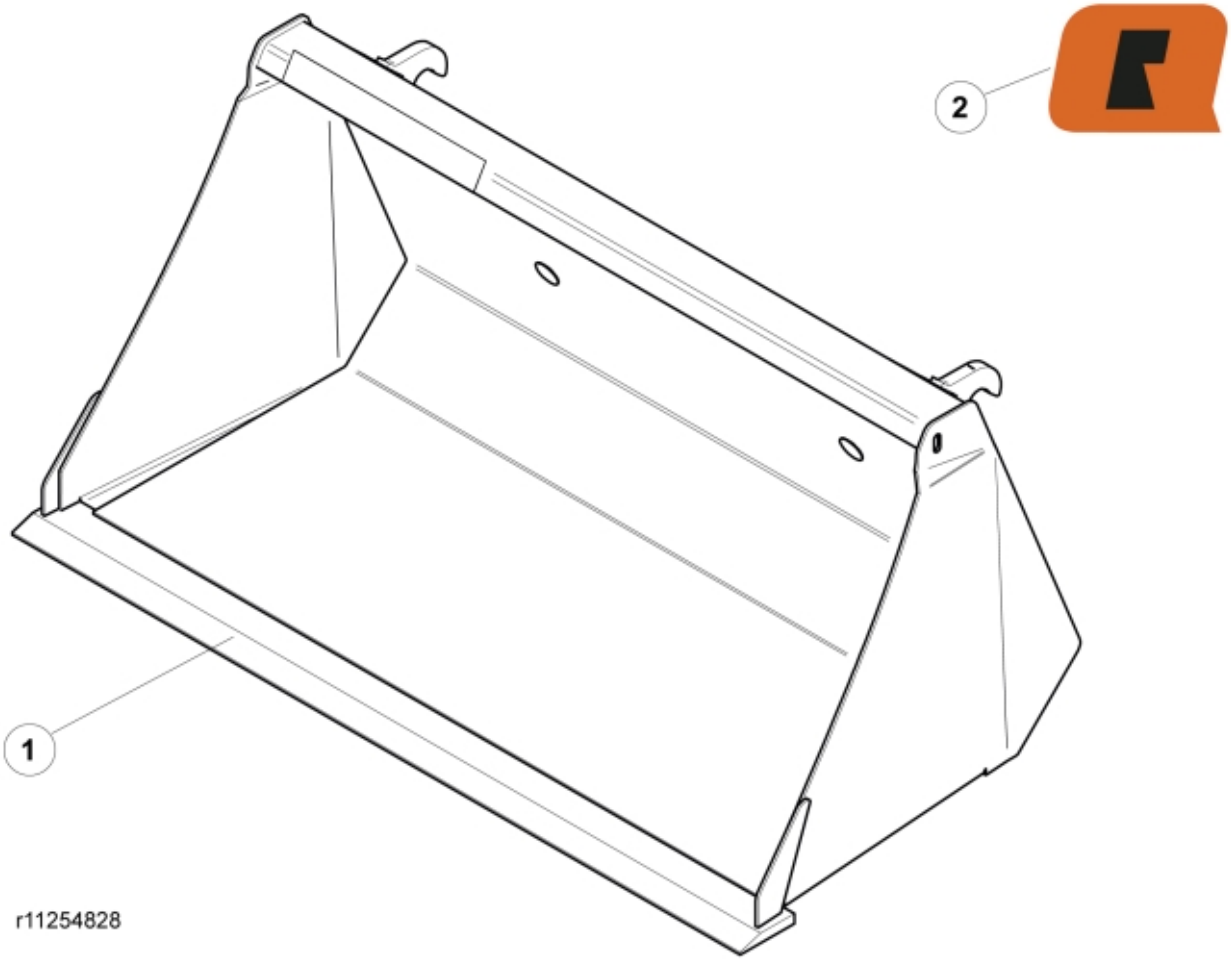

© 2025 Jost

Part assemblies	Bucket CL 130 Euro
Specification	Year From: 5/1/2017 12:00:00 AM

PartNo	Pos	Qty	Name	Specifications
11254828		1	Bucket CL 130 Euro	5/1/2017 12:00:00 AM
60021424	1	1 PCS	Cutting edge	1340 mm
60049053	2	2	Decal	"Q" small 80x57
5022119		2	Plug	

© 2025 Jost