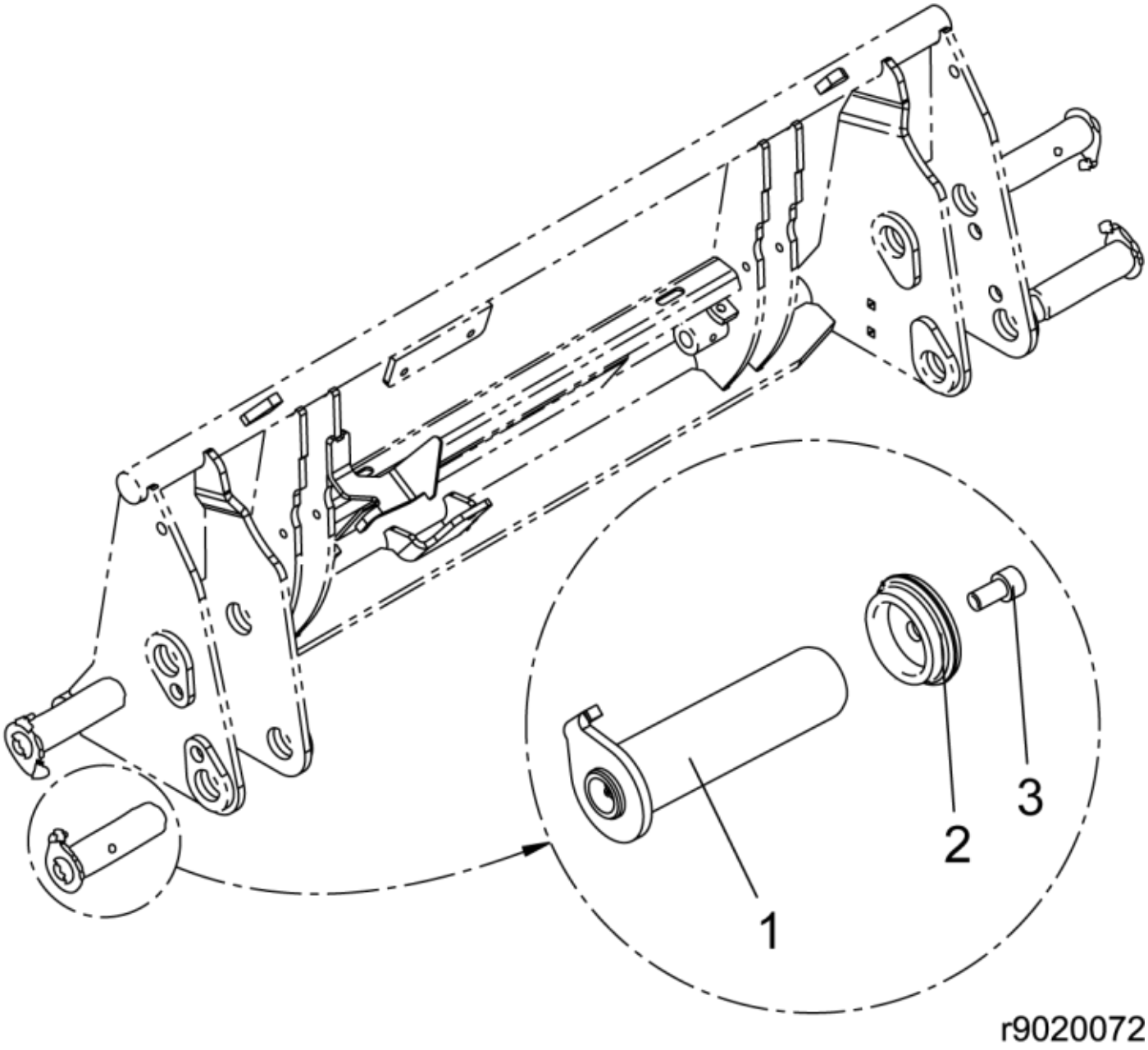

© 2025 Jost

Part assemblies		Pin kit		
Specification		Specification: Replaces 9020072		
PartNo	**Pos**	**Qty**	**Name**	**Specifications**
60021068		1 PCS	Pin kit	Replaces 9020072
60019828	1	4	• Pivot Pin	D=40, L=147mm
5215131	2	4	• Locking cover	
5050608	3	4	• Screw	MC6S M10x20 Loc

© 2025 Jost