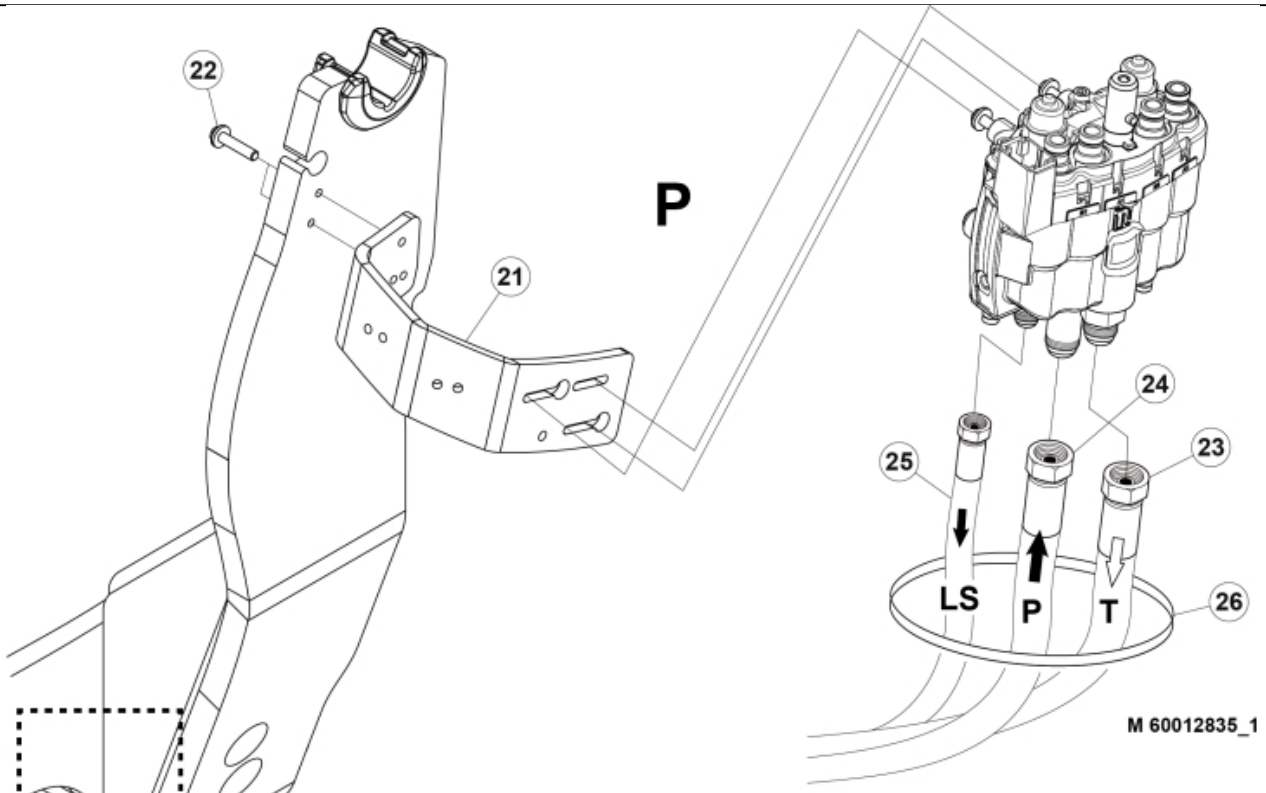

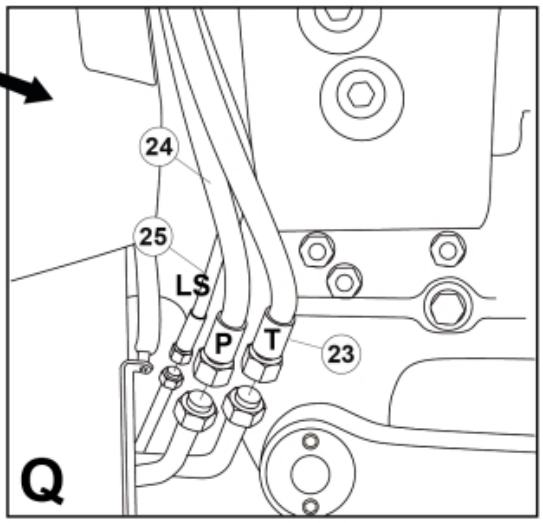

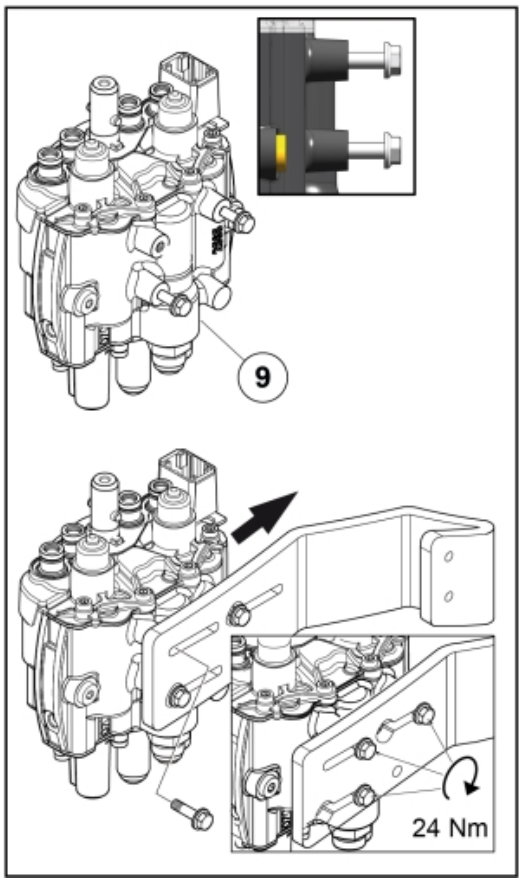

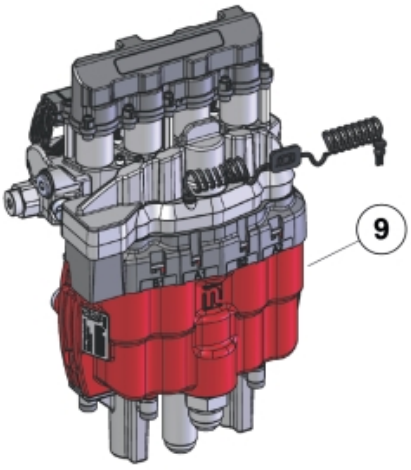

© 2025 Jost

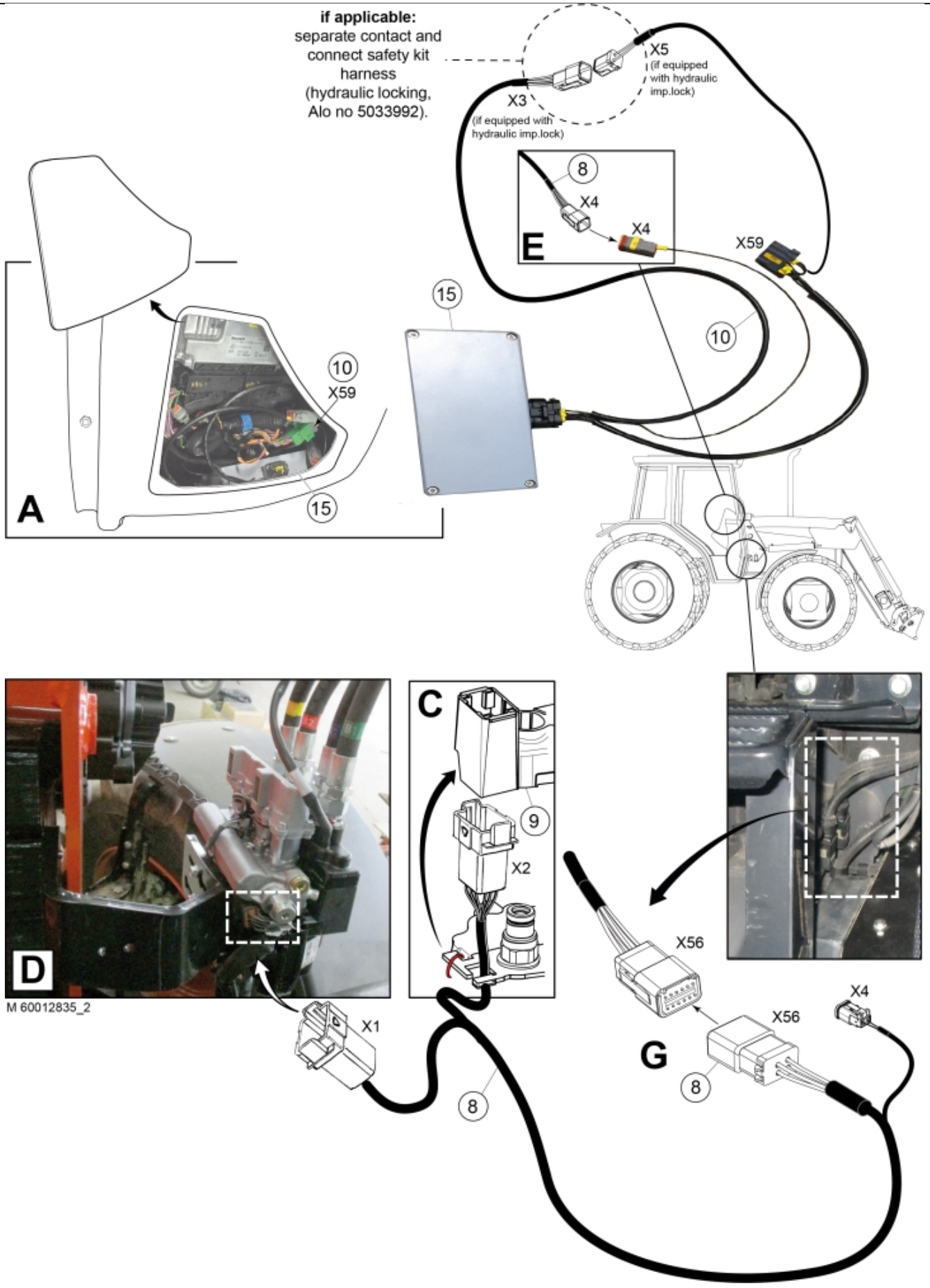
if applicable:
separate contact and connect safety kit harness (hydraulic locking, Alo no 5033992).
X5
(if equipped with hydraulic imp.lock)
X3
(if equipped with hydraulic imp.lock)
8
X4
X4
E
X59
15
10
10
X59
15
A
C
9
X2
D
M 60012835_2
X1
8
X56
X4
X56
G
8

© 2025 Jost

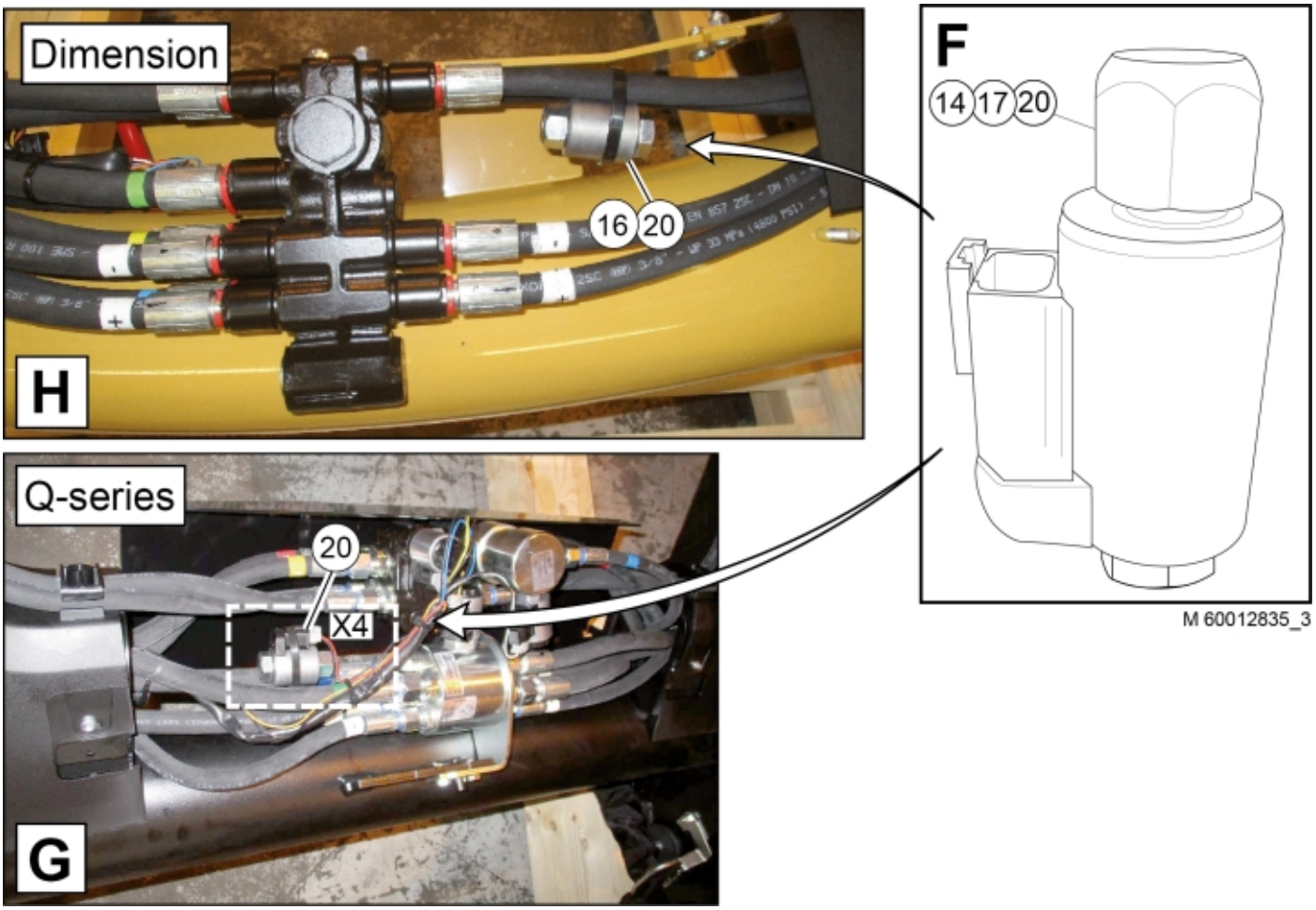

© 2025 Jost

Part assemblies Hydraulic kit

PartNo	Pos	Qty	Name	Specifications
60012835		1 PCS	Hydraulic kit	
5033621	2	4	Cable tie	4.6x150
60012853	8	1	Cable	
60012866	9	1 PCS	Control valve	
60018154	10	1	Cable	
5011555	14	1	Nut	M12 Loc
60023408	15	1 PCS	Control unit	
60023412	16	1	Cable	
5002108	17	1	Screw	M6S M12x60
60024210	20	1 PCS	Solenoid	
60011836		1 PCS	Hydraulic connection	
10391712	21	1	• Valve bracket	
5005999	22	2	• Screw	M6SF M10X45
5050476	23	1 PCS	• Hose	3/4" L=1000 1 1/16 RLM - 1 3/16 45LM
5050477	24	1 PCS	• Hose	5/8" L=1000 1 1/16 RLM - 1 1/16 RLM
5050478	25	1 PCS	• Hose	1/4" L=1000 9/16 RLM - 9/16 RLM
5033606	26	4	• Cable tie	7,5 x 385
5033621	27	4	• Cable tie	4.6x150

© 2025 Jost