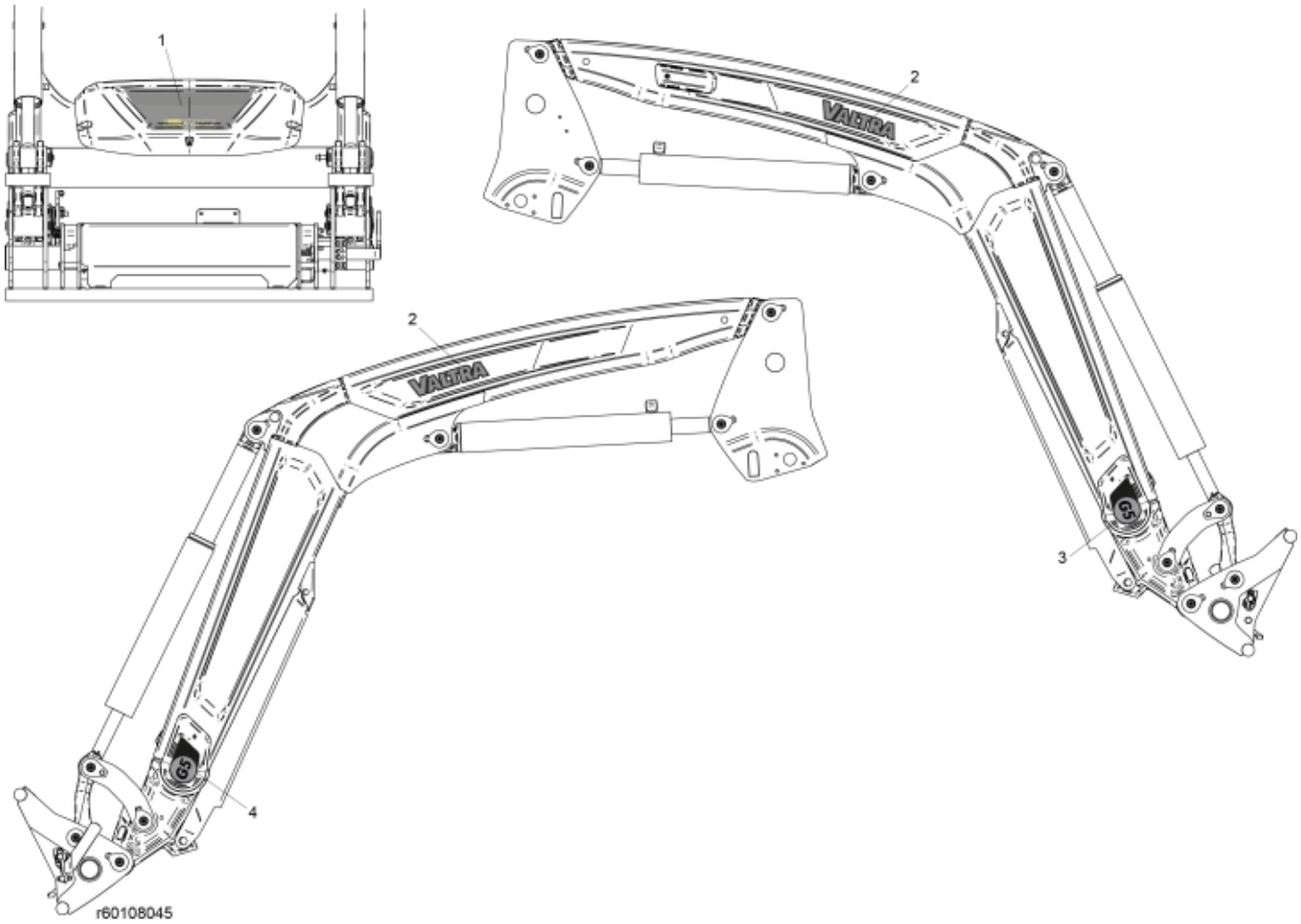

© 2025 Jost

Description	G5
Part assemblies	Decals

PartNo	Pos	Qty	Name	Specifications
60108090	1	1	Decal	Centre Cover
60108055	2	2 PCS	Decal, Brand	Valtra
60108071	3	1 PCS	Decal Model, RH	G5
60108070	4	1 PCS	Decal Model, LH	G5

© 2025 Jost