Multibenne™ XL

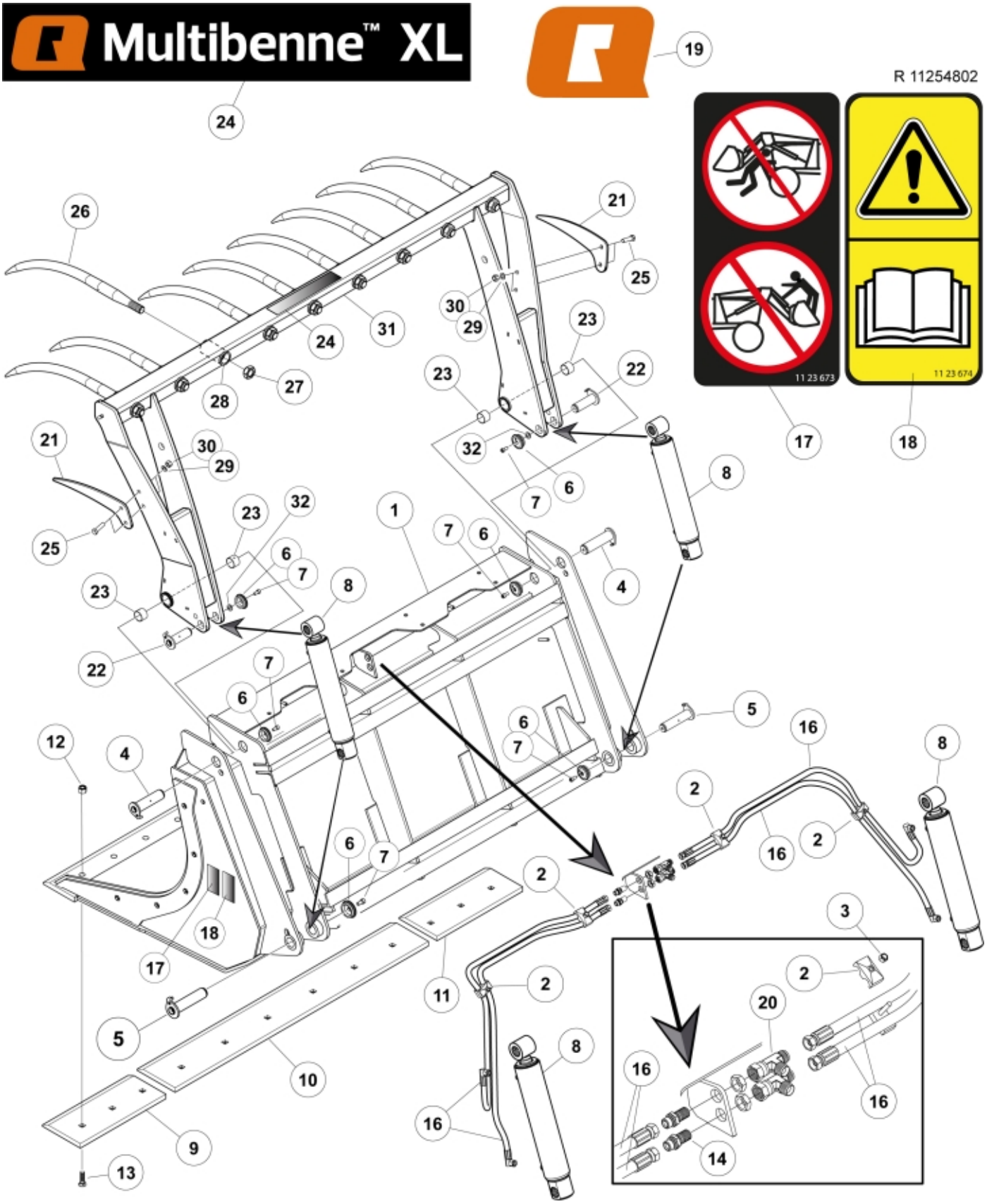

© 2025 Jost

Part assemblies	Multibenne XL 190 Forged tines
Specification	Year From: 6/1/2017 12:00:00 AM

PartNo	Pos	Qty	Name	Specifications
11254802			Multibenne XL 190 Forged tines	6/1/2017 12:00:00 AM
60021262	1	1 PCS	Bucket	Multibenne XL 190
5016968	2	4	Hose clamp	
5011553	3	4	Nut	M6M M8 Loc-king
60019828	4	2	Pivot Pin	D=40, L=147mm
60000355	5	2	Pivot Pin	D=35, L=147mm
5215131	6	6	Locking cover	
5004917	7	6	Screw	
60022048-1	8	2 PCS	Cylinder	
60017607-22	9	1 PCS	Cutting edge LH	Bolt-on
60015057-22	10	1 PCS	Cutting edge	Bolt-on
60017608-22	11	1 PCS	Cutting edge RH	Bolt-on
5050485	12	12	Locking nut	UNC 5/8"
5050364	13	12 PCS	Plow bolt	5/8" - 2 inch
11120580	14	2	Adapter cpl.	
60022686	16	4 PCS	Hose	3/8" L=1350 G90LMC-1/2"GRLM
1123673	17	1	Warning decal	
1123674	18	1	Warning decal	"Read manual"
60056616	19	2	Decal	"Q" medium 110mm
5028031	20	2	T-Adapter	
11260312-22	21	2	Side tine	
60018058	22	2	Pivot Pin	D=35, L=96mm
5018904	23	4	Bushing	D40 L=30
60004291	24	1 PCS	Decal	Multibenne XL
5002145	25	4	Screw	M6S M14 x 40 (10.9)
5068112-17	26	9 PCS	Tine with nut	L=680, Curved
5068111	27	1	• Nut	Conus 1
9010120	28	9 PCS	Sleeve	Conus 1 Curved
5013107	29	4	Washer	BRB 15 x 26 x 2
5011556	30	4	Nut	M14
60021206	31	1 PCS	Upper part	Multibenne XL 190 Forged tines
5013110	32	2	Washer	BRB 10.5x22x2

© 2025 Jost