Multibenne™ XL

R 11254805

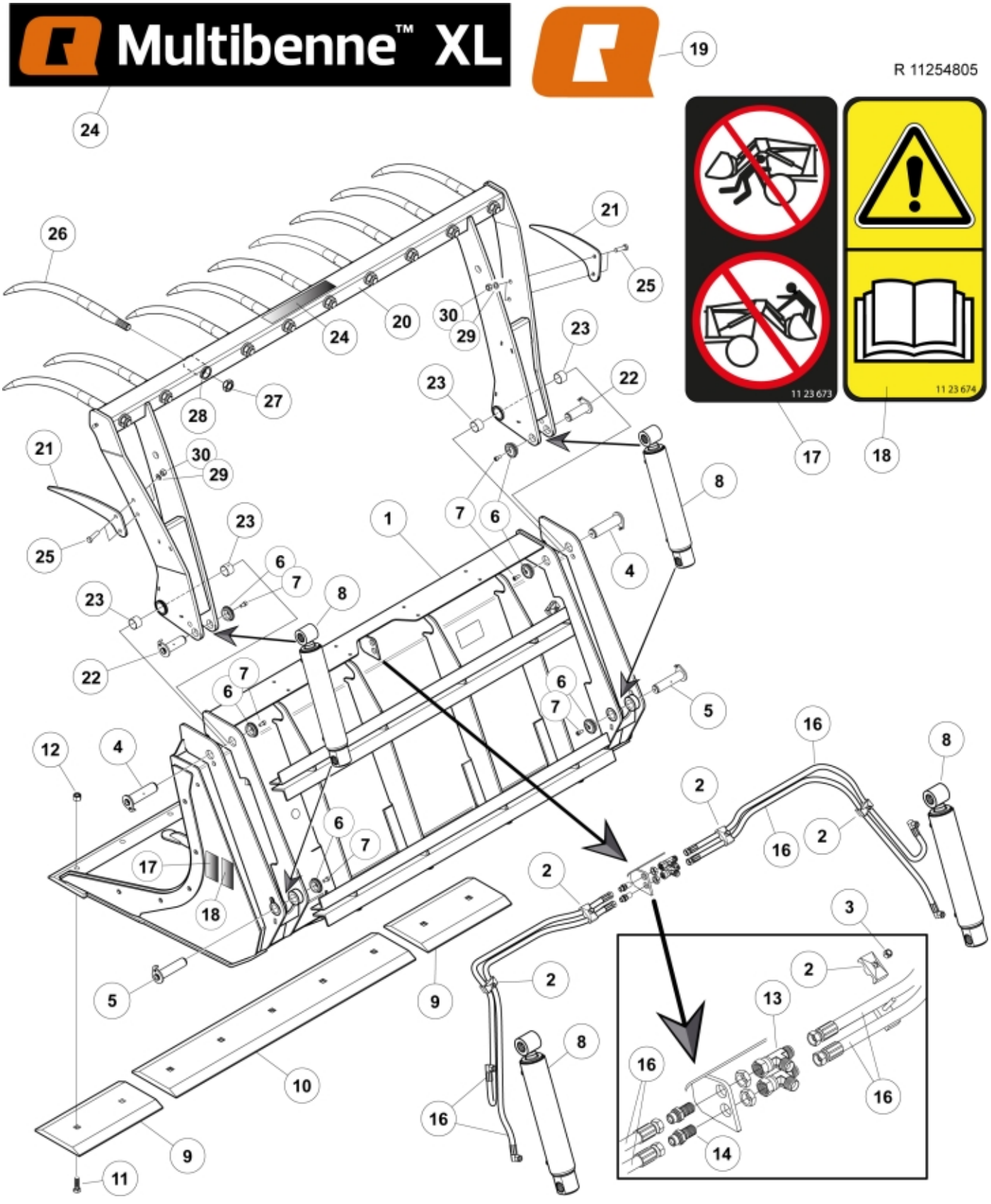

© 2025 Jost

Part assemblies	Multibenne XL 250 Forged tines
Specification	Year From: 6/1/2017 12:00:00 AM

PartNo	Pos	Qty	Name	Specifications
11254805			Multibenne XL 250 Forged tines	6/1/2017 12:00:00 AM
60021018	1	1 PCS	Bucket	Multibenne XL 250
5016968	2	4	Hose clamp	
5011553	3	4	Nut	M6M M8 Loc-king
60019828	4	2	Pivot Pin	D=40, L=147mm
60000355	5	2	Pivot Pin	D=35, L=147mm
5215131	6	6	Locking cover	
5004917	7	6	Screw	
60126216-1	8	2	Cylinder	4/8/2026 12:00:00 AM
60016510-22	9	2 PCS	Cutting edge	Outer
60016511-22	10	1	Cutting edge	Centre
5050650	11	15 PCS	Plow bolt	3/4" - 2.5 inch
5050652	12	15	Locking nut	UNC 3/4"
5028031	13	2	T-Adapter	
11120580	14	2	Adapter cpl.	
60022714	16	4 PCS	Hose	L=1550, 3/8"G90LMC-1/2"GRLM
1123673	17	1	Warning decal	
1123674	18	1	Warning decal	"Read manual"
60056616	19	2	Decal	"Q" medium 110mm
60021355	20	1 PCS	Upper part	Multibenne XL 250
11260312-22	21	2	Side tine	
9020073	22	2 PCS	Pivot Pin	D=35, L=106mm
5018904	23	4	Bushing	D40 L=30
60004291	24	1 PCS	Decal	Multibenne XL
5002145	25	4	Screw	M6S M14 x 40 (10.9)
60021462-17	26	10 PCS	Tine with nut	
5068116	27	1	• Nut	Conus 2
60021420	28	10 PCS	Sleeve	Conus 2 Curved
5013107	29	4	Washer	BRB 15 x 26 x 2
5011556	30	4	Nut	M14

© 2025 Jost