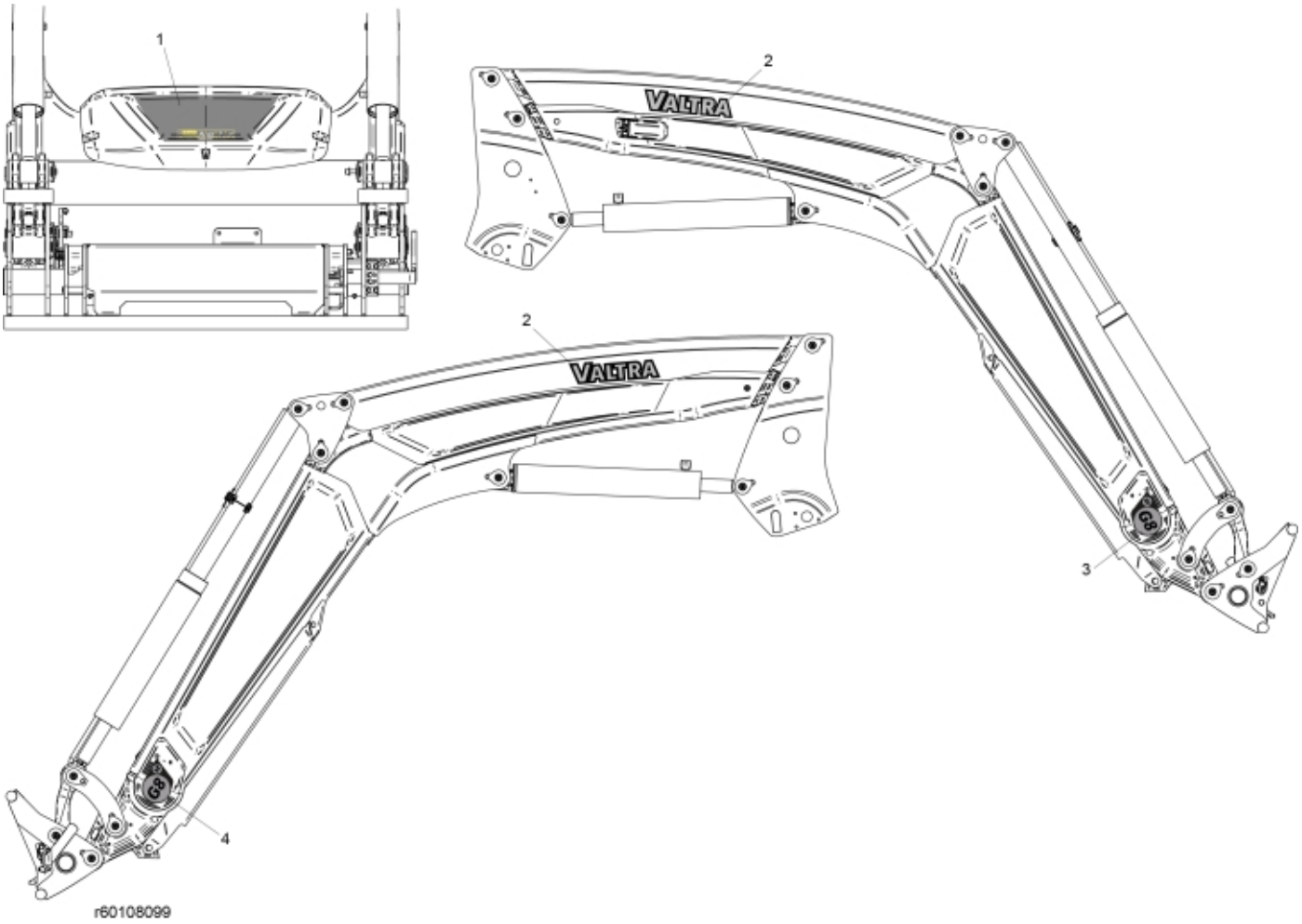

© 2025 Jost

Description	G8M
Part assemblies	Decals

PartNo	Pos	Qty	Name	Specifications
60108090	1	1	Decal	Centre Cover
11133937	2	2	Decal, Brand	
60108097	3	1	Decal Model, RH	G8M
60108096	4	1	Decal Model, LH	G8M

© 2025 Jost