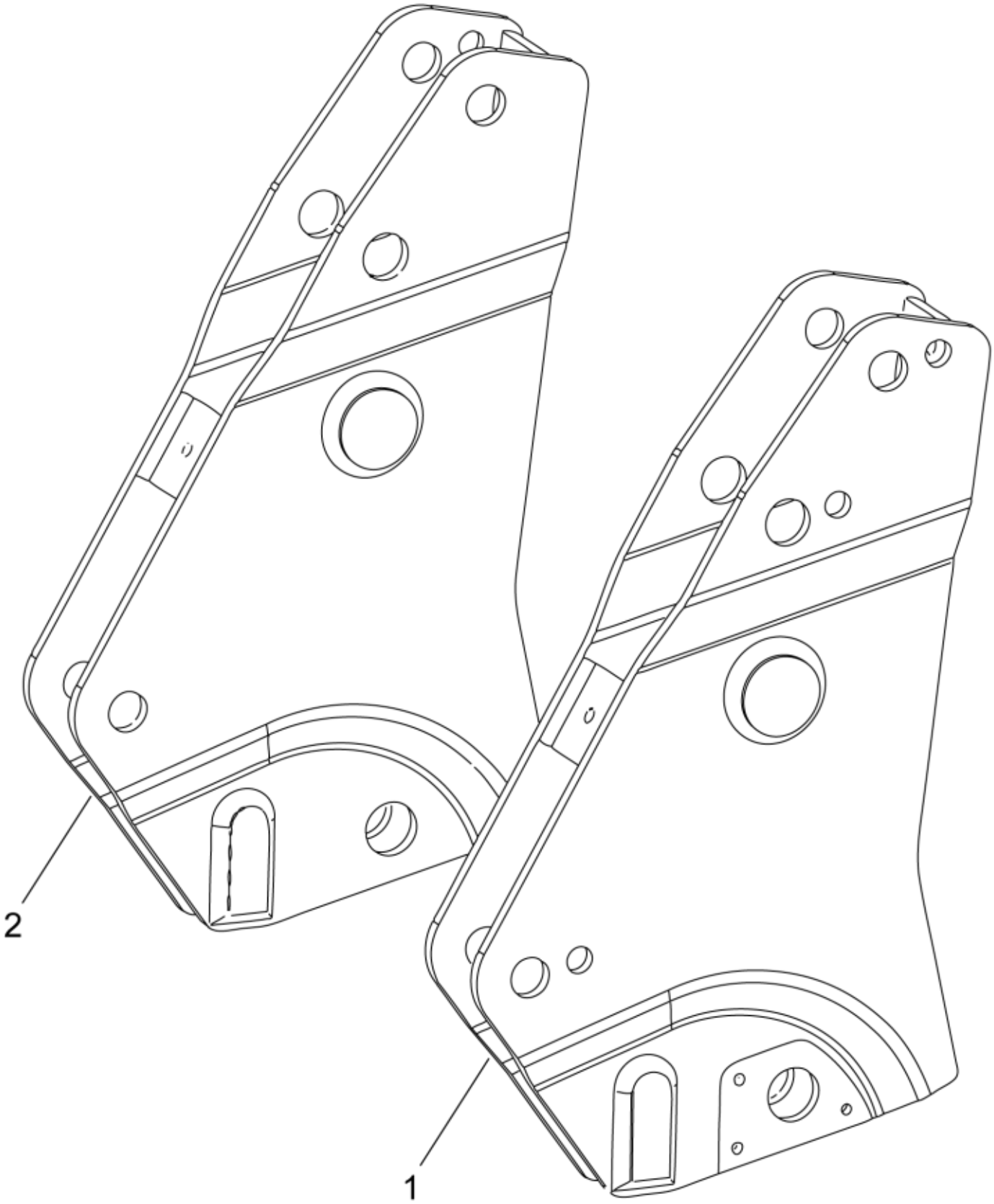

r5212513_5212523

© 2025 Jost

Part assemblies	Bearing boxes	
Specification	Specification: Fendt NG	

PartNo	Pos	Qty	Name	Specifications
5220193-32		1	Bearing boxes	Fendt NG
5212511-32	1	1	• Bearing box LH	Fendt NG
5212521-32	2	1	• Bearing box RH	Fendt NG

© 2025 Jost